May.1.2024 Copyright 2024 HIROSE ELECTRIC CO., LTD. All Rights Reserved.
In case of consideration for using Automotive equipment / device which demand high reliability, kindly contact our sales window correspondents.

	COUNT	DESCRIPTION OF REVISIONS	BY	CHKD	DATE		COUNT	DESCRIPTION OF REVISIONS	BY	CHKD	DATE
△					. .	△					. .
△					. .	△					. .
△					. .	△					. .

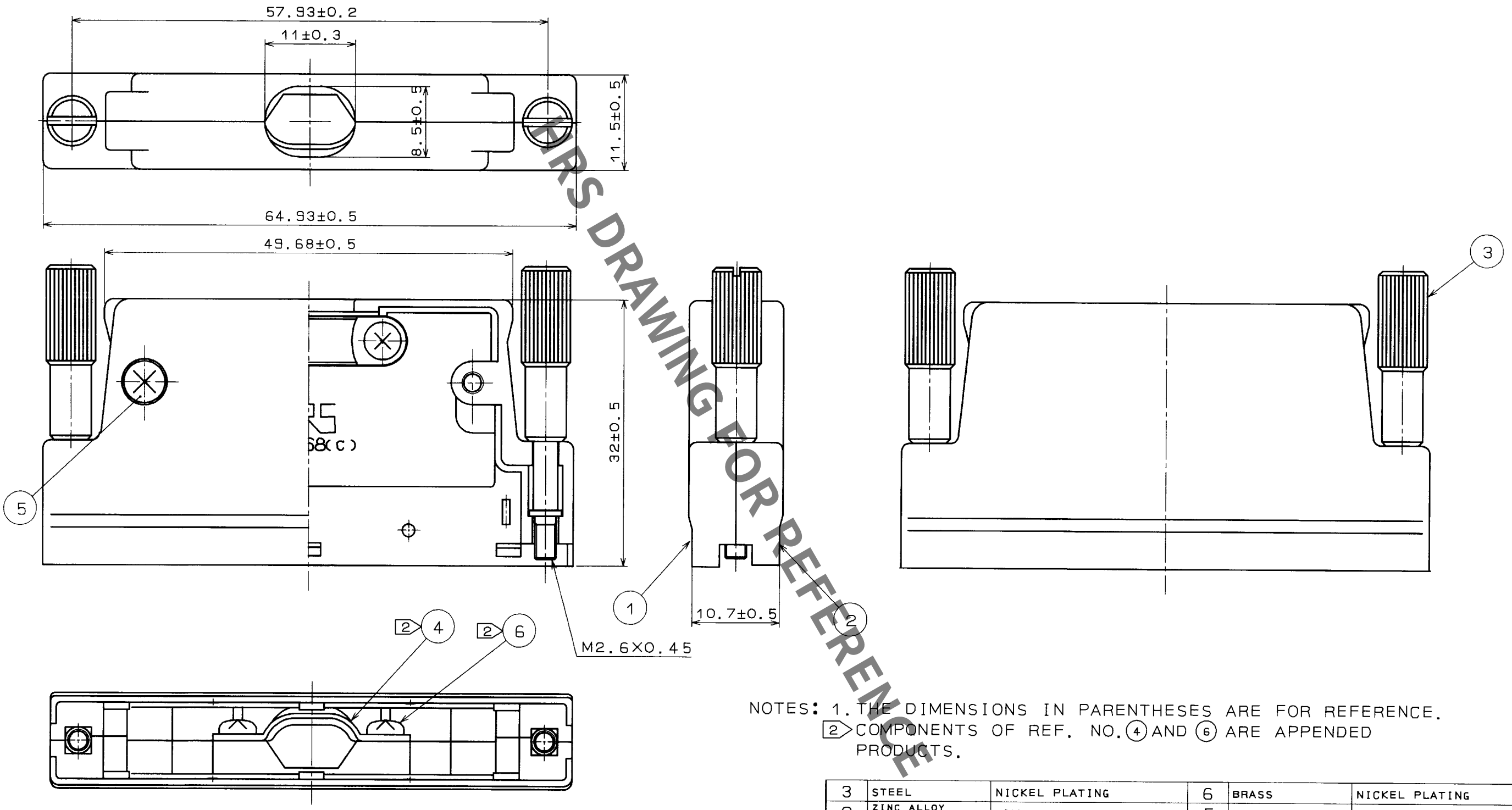

NOTES: 1. THE DIMENSIONS IN PARENTHESES ARE FOR REFERENCE.
2 COMPONENTS OF REF. NO. 4 AND 6 ARE APPENDED PRODUCTS.

NO.	MATERIAL	FINISH , REMARKS	NO.	MATERIAL	FINISH , REMARKS
3	STEEL	NICKEL PLATING	6	BRASS	NICKEL PLATING
2	ZINC ALLOY DIE CASTING	SILVER BURNING COATING	5	BRASS	NICKEL PLATING
1	ZINC ALLOY DIE CASTING	SILVER BURNING COATING	4	STAINLESS STEEL	

CODE NO. (OLD)	DRAWN	DESIGNED	CHECKED	APPROVED	RELEASED
	K. Kurabuchi '98.05.22	K. Kurabuchi '98.05.22	T. Aso 98.05.23	H. Tanaka 98.6.28	

SCALE 1 : 1	DRAWING NO. EDC3-040392	PART NO. DX30M-68-CV2
UNITS mm	HRS HIROSE ELECTRIC CO., LTD.	CODE NO. CL230-5059-9 1/1

FORM No. 229

TO
Q1
USA