Apr.1.2024 Copyright 2024 HIROSE ELECTRIC CO., LTD. All Rights Reserved.
In case of consideration for using Automotive equipment / device which demand high reliability, kindly contact our sales window correspondents.

△1 Redraw

Cable assembly tool
For soldering : HRM-200/SO-MD
For press fitting of hood : HRM-200-BPJBN/CV-MD

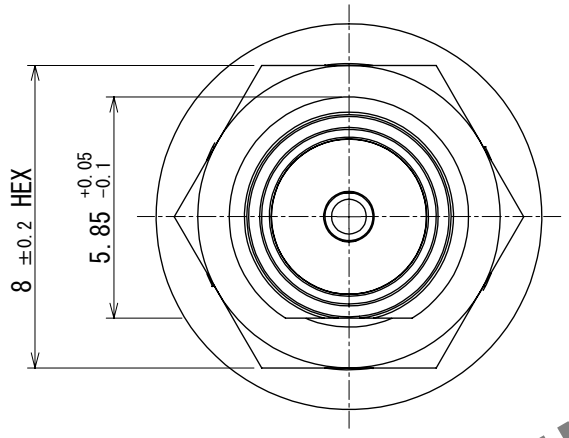

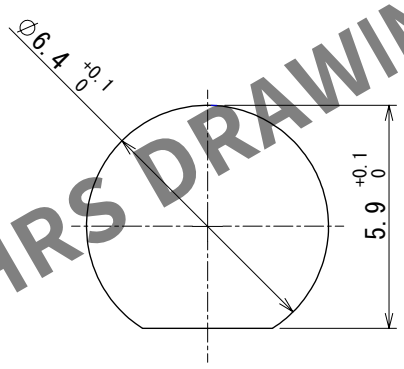

Panel cut out(Reference)
Panel thickness
0.7～2.2mm

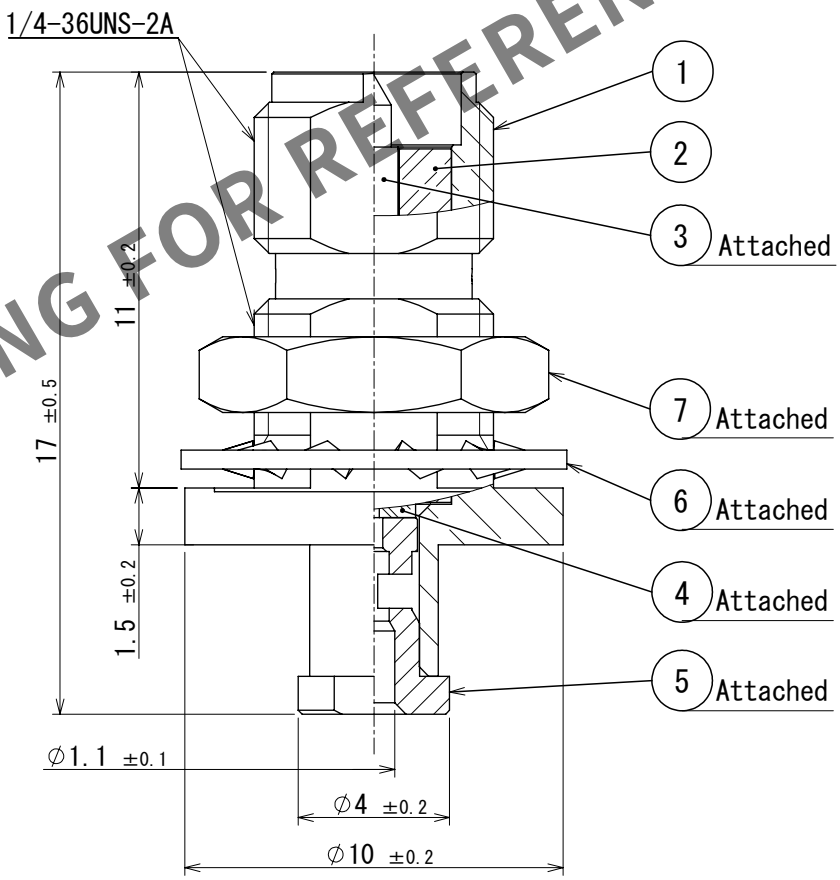

HRS DRAWING FOR REFERENCE

NO.	MATERIAL	FINISH , REMARKS	NO.	MATERIAL	FINISH , REMARKS
4	PTFE				
3	Brass	Gold plating	7	Brass	Nickel plating
2	PTFE		6	Brass	Nickel plating
1	Brass	Nickel plating	5	Brass	Gold plating

UNITS	SCALE		COUNT	DESCRIPTION OF REVISIONS	DESIGNED	CHECKED	DATE
mm	5:1	△1	1	DIS-D-00010921	NK.OOSAWA	MT.KANEKO	2022.03.17

HIROSE ELECTRIC CO., LTD.

APPROVED	: TS.NOBE	2013.11.20
CHECKED	: NK.NINOMIYA	2013.11.20
DESIGNED	: MS.MATSUMOTO	2013.11.15
DRAWN	: MS.MATSUMOTO	2013.11.15

DRAWING NO. EDC-341882-00-00
PART NO. SMA(R)-200-040BPJBN
CODE NO. CL0323-0927-6-00
△1 1/1

FORM HC0011-5