Apr.1.2024 Copyright 2024 HIROSE ELECTRIC CO., LTD. All Rights Reserved.
In case of consideration for using Automotive equipment / device which demand high reliability, kindly contact our sales window correspondents.

CABLE ASSEMBLY TOOL
FOR SOLDERING :HRM-200/SO-MD
FOR PRESS FITTING:HRM-200-BPJBN/CV-MD

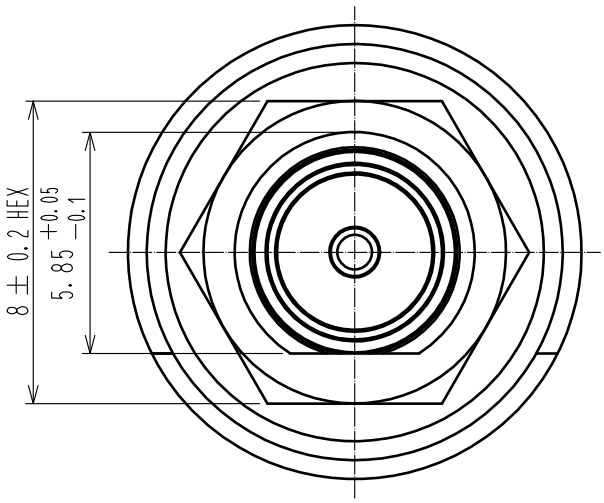

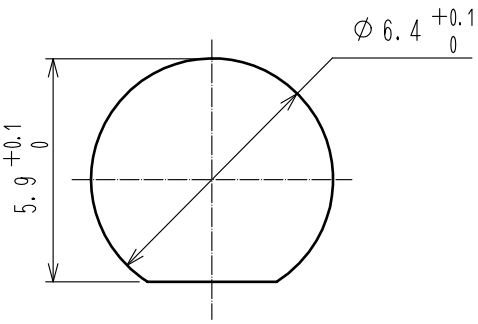

PANEL CUTOUT
PANEL THICKNESS : 0.7～2.2mm

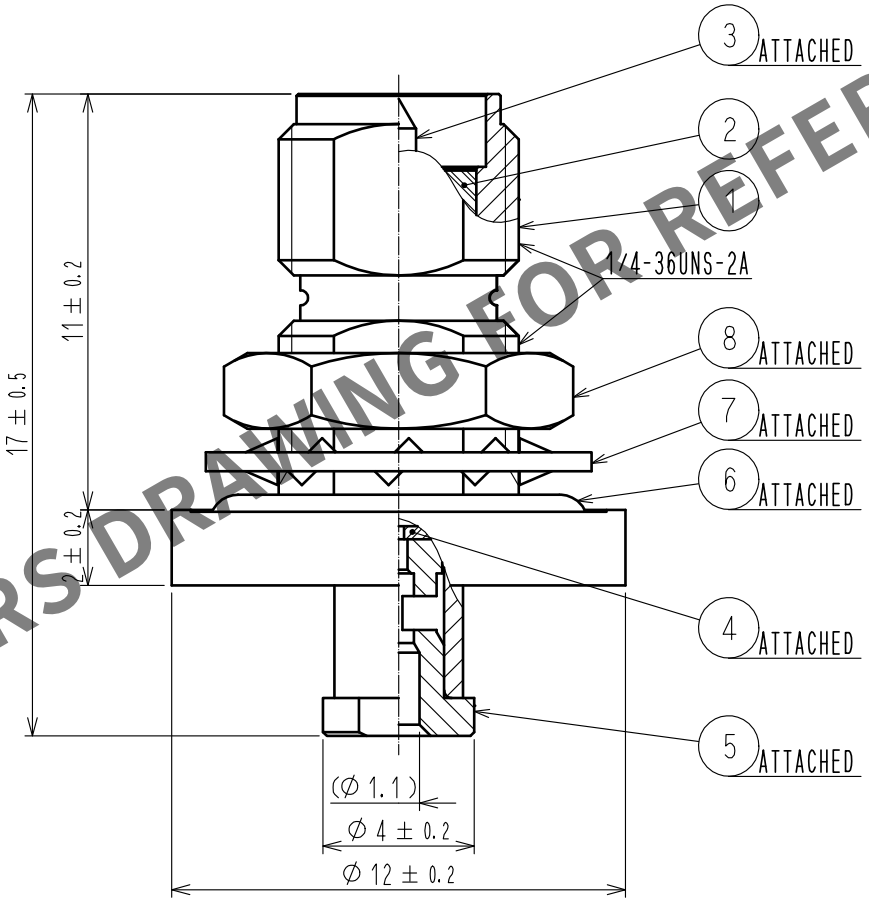

HRS DRAWING FOR REFERENCE

NO.	MATERIAL	FINISH . REMARKS	NO.	MATERIAL	FINISH . REMARKS
4	PTFE		8	BRASS	NICKEL PLATING
3	BRASS	GOLD PLATING	7	BRASS △1	NICKEL PLATING
2	PTFE		6	SILICONE RUBBER	(RED)
1	BRASS	NICKEL PLATING	5	BRASS	GOLD PLATING

UNITS	SCALE		COUNT	DESCRIPTION OF REVISIONS	DESIGNED	CHECKED	DATE
mm	5 : 1	△1	1	DIS-D-00003104	KY. SHIMIZU	TO. KATAYAMA	18.04.27

HIROSE ELECTRIC CO., LTD.

APPROVED	TO. KATAYAMA	18.04.04	DRAWING NO. EDC-352878-00-00
CHECKED	TO. KATAYAMA	18.04.04	PART NO. SMA(R)-200-040WBPJBN
DESIGNED	KY. SHIMIZU	18.04.04	
DRAWN	KY. SHIMIZU	18.04.04	CODE NO. CL323-0947-3-00 △1 1/1

FORM HC0011-5-51