Apr.1.2024 Copyright 2024 HIROSE ELECTRIC CO., LTD. All Rights Reserved.
In case of consideration for using Automotive equipment / device which demand high reliability, kindly contact our sales window correspondents.

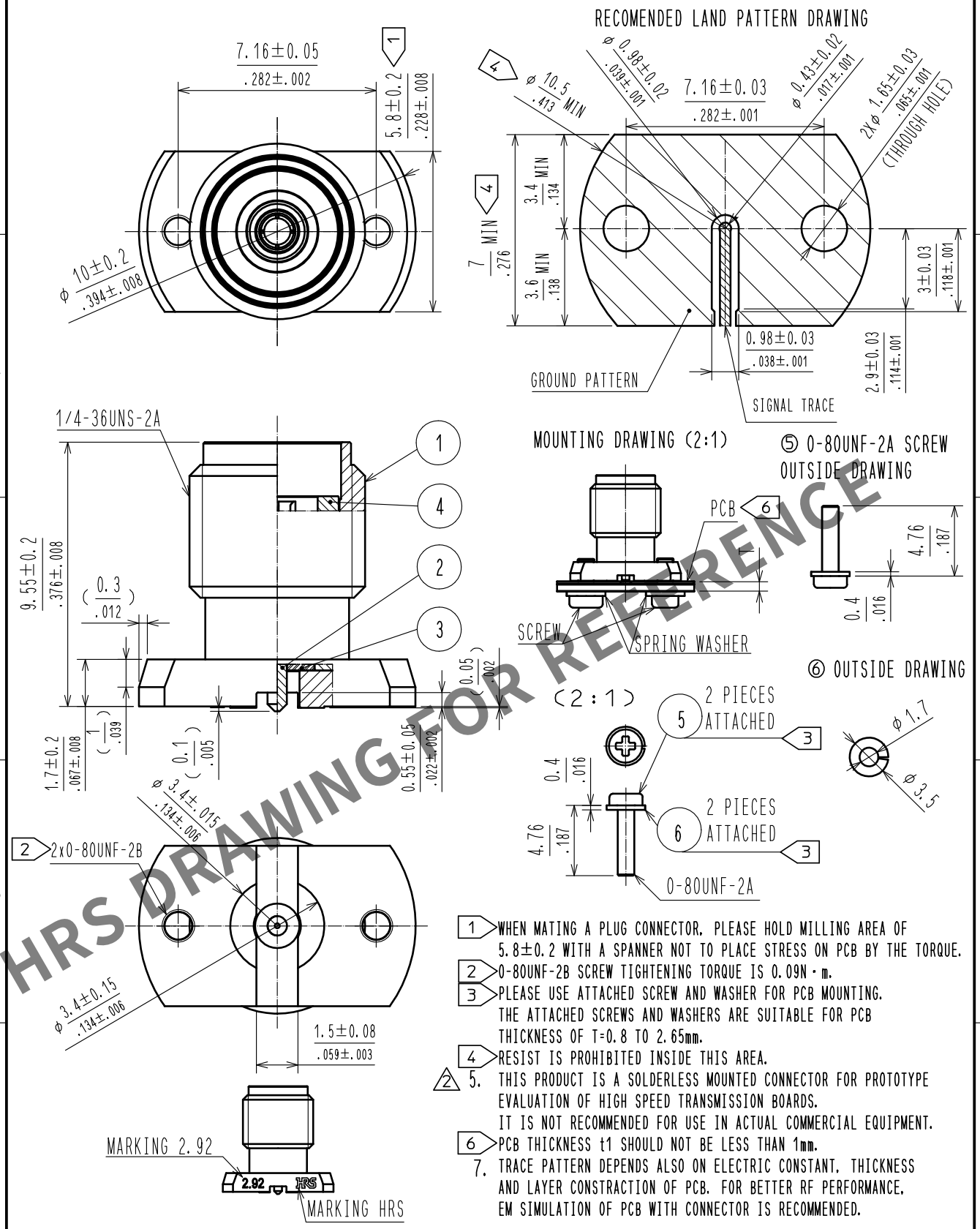


HRS DRAWING FOR REFERENCE

1. WHEN MATING A PLUG CONNECTOR, PLEASE HOLD MILLING AREA OF 5.8±0.2 WITH A SPANNER NOT TO PLACE STRESS ON PCB BY THE TORQUE.
2. 0-80UNF-2B SCREW TIGHTENING TORQUE IS 0.09N・m.
3. PLEASE USE ATTACHED SCREW AND WASHER FOR PCB MOUNTING. THE ATTACHED SCREWS AND WASHERS ARE SUITABLE FOR PCB THICKNESS OF T=0.8 TO 2.65mm.
4. RESIST IS PROHIBITED INSIDE THIS AREA.
5. THIS PRODUCT IS A SOLDERLESS MOUNTED CONNECTOR FOR PROTOTYPE EVALUATION OF HIGH SPEED TRANSMISSION BOARDS. IT IS NOT RECOMMENDED FOR USE IN ACTUAL COMMERCIAL EQUIPMENT.
6. PCB THICKNESS t1 SHOULD NOT BE LESS THAN 1mm.
7. TRACE PATTERN DEPENDS ALSO ON ELECTRIC CONSTANT, THICKNESS AND LAYER CONSTRACTION OF PCB. FOR BETTER RF PERFORMANCE, EM SIMULATION OF PCB WITH CONNECTOR IS RECOMMENDED.

| NO. | MATERIAL | FINISH . REMARKS | NO. | MATERIAL | FINISH . REMARKS |
|---|---|---|---|---|---|
| 3 | PTFE | | 6 | STAINLESS STEEL | SPRING WASHER |
| 2 | BERYLLIUM COPPER | GOLD PLATING | 5 | STEEL | 0-80UNF-2A SCREW |
| 1 | STAINLESS STEEL | GOLD PLATING | 4 | STAINLESS STEEL | PASSIVATED |

| UNITS mm / inch | SCALE 5 : 1 | COUNT | DESCRIPTION OF REVISIONS | DESIGNED | CHECKED | DATE |
|---|---|---|---|---|---|---|
| | | 2 1 | DIS-D-00016754 | YJ. HAGA | TS. KANEKO | 20230904 |

HIROSE ELECTRIC CO., LTD.

| | | |
|---|---|---|
| APPROVED | TS. NOBE | 20190401 |
| CHECKED | TS. NOBE | 20190401 |
| DESIGNED | MH. OGUSU | 20190401 |
| DRAWN | MH. OGUSU | 20190401 |

DRAWING NO. EDC-379164-12-00
PART NO. HK-R-SR2-S(12)
CODE NO. CL0338-0006-0-12
2 1/1

FORM HC0011-5-51