May.1.2024 Copyright 2024 HIROSE ELECTRIC CO., LTD. All Rights Reserved.
In case of consideration for using Automotive equipment / device which demand high reliability, kindly contact our sales window correspondents.

| | △數 COUNT | 訂正事項 DESCRIPTION OF REVISIONS | 擔當 B Y | 檢圖 CHKD | 年月日 DATE | | △數 COUNT | 訂正事項 DESCRIPTION OF REVISIONS | 擔當 B Y | 檢圖 CHKD | 年月日 DATE |
|---|---|---|---|---|---|---|---|---|---|---|---|
| △1 | | | | | . . | △ | | | | | . . |
| △ | | | | | . . | △ | | | | | . . |
| △ | | | | | . . | △ | | | | | . . |

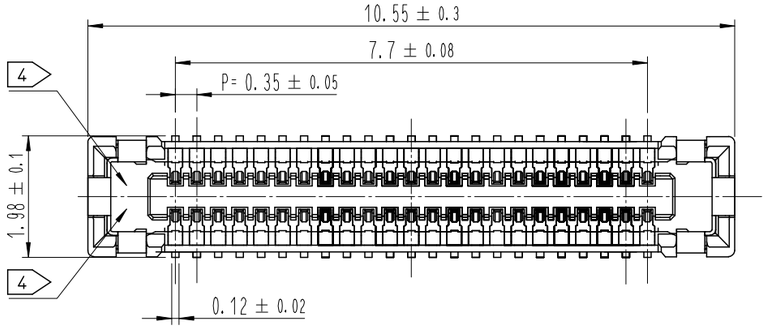


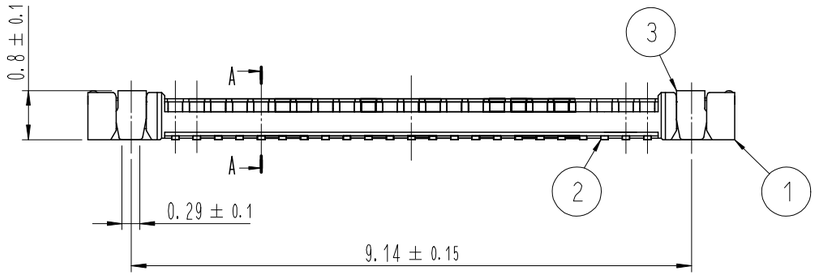


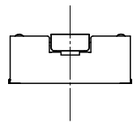

A-A(50:1)

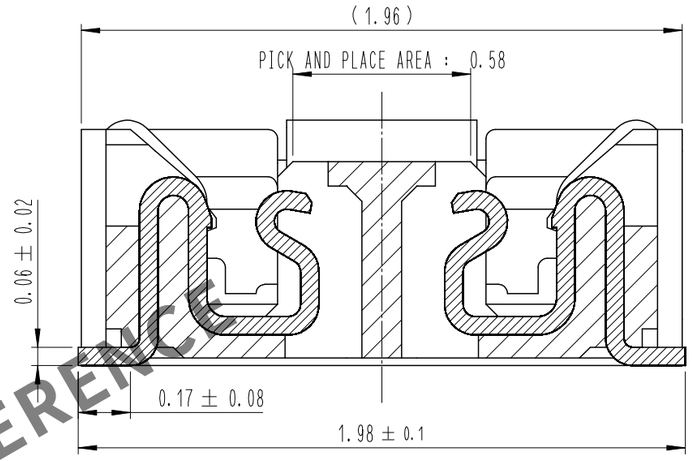


ENGAGEMENT FIGURE (50:1)

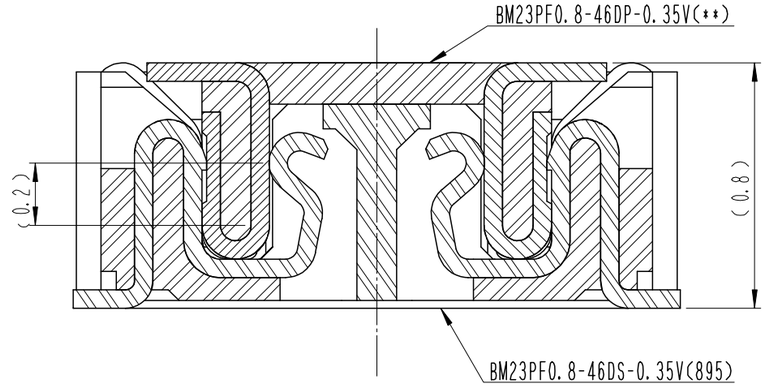


HRS DRAWING FOR REFERENCE

DRAWING FOR REFERENCE
This is subject to change without notice

NOTE
1. ALL LEAD CO-PLANARITY SHALL BE 0.08mm MAX.
2. CONTACT PLATING SPECIFICATIONS.
CONTACT AREA : GOLD 0.05μm MIN.
SMT LEAD : GOLD 0.05μm MIN.
UNDERPLATING : NICKEL 1μm MIN.
( SURFACE : SEALING )
3. MATAL FITTING PLATING SPECIFICATIONS.
SMT LEAD : GOLD 0.05μm MIN.
UNDERPLATING : NICKEL 1μm MIN.
( SURFACE : SEALING )
4. HRS MARK AND CAV NO. IS INDICATED IN APPROX POSITION SHOWN.

| NO. | MATERIAL | FINISH , REMARKS | NO. | MATERIAL | FINISH , REMARKS |
|---|---|---|---|---|---|
| 4 | PS | CLEAR (EMBOSSED CARRIER TAPE) | | | |
| 3 | COPPER ALLOY | 3 | | | |
| 2 | COPPER ALLOY | 2 | 6 | PS | BLACK (PLASTIC REEL) |
| 1 | LCP | UL94 V-0, BLACK | 5 | POLYESTER | CLEAR (COVER TAPE) |

| REMARKS | DRAWN | DESIGNED | CHECKED | APPROVED | RELEASED |
|---|---|---|---|---|---|
| | S. H. JUNG 17.05.09 | S. H. JUNG 17.05.09 | H. W. JO 17.05.09 | T. S. KANG 17.05.09 | 17.05.09 |

| | | | |
|---|---|---|---|
| CODE NO. (OLD) | SCALE 10:1 / UNITS mm | DRAWING NO. EDC3-632258 | PART NO. BM23PF0.8-46DS-0.35V(895) |
| | | HRS HIROSE KOREA CO., LTD. | CODE NO CL 6644-0089-8-895 1/3 |

May.1.2024 Copyright 2024 HIROSE ELECTRIC CO., LTD. All Rights Reserved.
In case of consideration for using Automotive equipment / device which demand high reliability, kindly contact our sales window correspondents.

6 ◈RECOMMENDED PCB LAYOUT

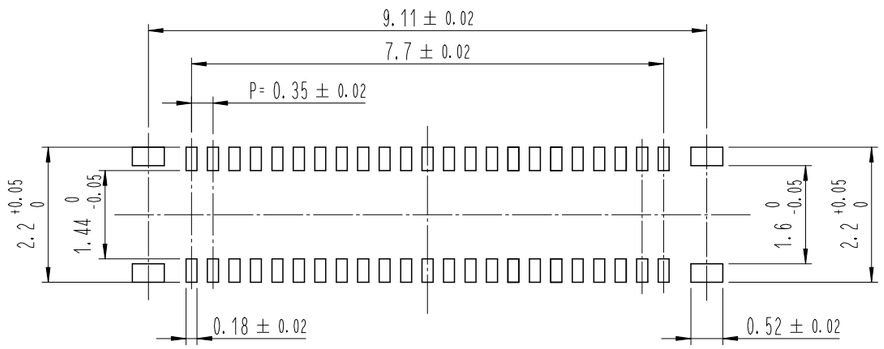


◈RECOMMENDED METAL MASK DIMENSIONS
MATAL MASK THICKNESS : 100μm

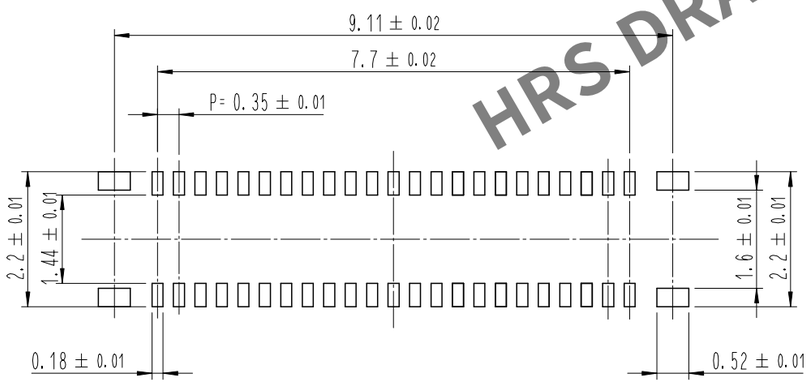


5 RECOMMENDED REFLOW TEMPERATURE PROFILE
USING LEAD-FREE SOLDER PASTE.

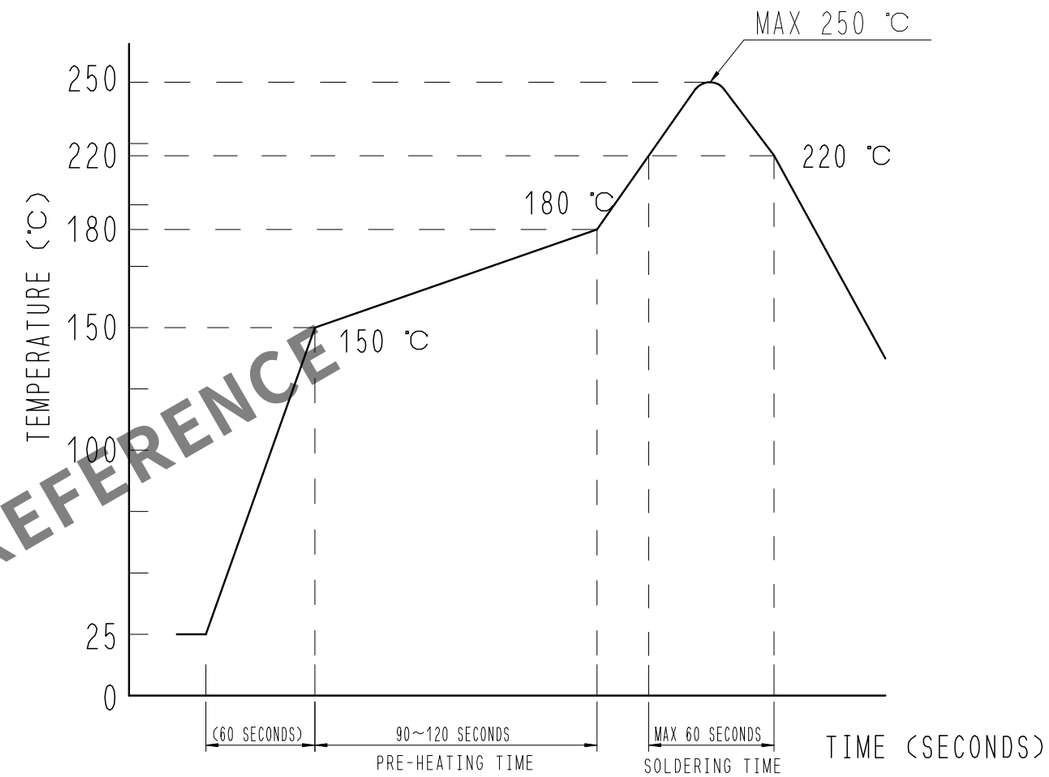


HRS DRAWING FOR REFERENCE

REFLOW METHOD: N2 REFLOW
NUMBER OF REFLOW CYCLES:2 CYCLES MAX.
1)REFLOW TIME
DURATION ABOVE 220℃, 60 SEC MAX.
(PEAK TEMPERATURE:250℃ MAX)
2)PRE-HEAT TIME
PRE-HEAT TEMPERATURE(MIN):150℃
PRE-HEAT TEMPERATURE(MAX):180℃
PRE-HEAT TIME:90-120 SEC.

5 THIS TEMPERATURE PROFILE IS PER THE CONDITIONS SHOWN ABOVE. ADDITIONAL FACTORS. SUCH AS SOLDER PASTE TYPE, PCB SIZE AND OTHER MOUNTED COMPONENTS COULD AFFECT THE PROFILE, THEREFORE, A THOROUGH EVALUATION OF MOUNTING CONDITION IS REQUIRED PRIOR TO PRODUCTION. TEMPERATURE IS MEASURED AT CONTACT LEAD.
6 PLEASE CONTACT US IN CASE YOU WILL MAKE DIFFERENT SETTINGS FROM OUR RECOMMENDATION.

| | | | |
|---|---|---|---|
| SCALE 10:1 | DRAWING NO. EDC3-632258 | PART NO. BM23PF0.8-46DS-0.35V(895) | |
| UNITS mm | HRS HIROSE KOREA CO., LTD. | CODE NO CL 6644-0089-8-895 | 2/3 |

May.1.2024 Copyright 2024 HIROSE ELECTRIC CO., LTD. All Rights Reserved.
In case of consideration for using Automotive equipment / device which demand high reliability, kindly contact our sales window correspondents.

# EMBOSSED CARRIER TAPE PACKAGING (5:1)

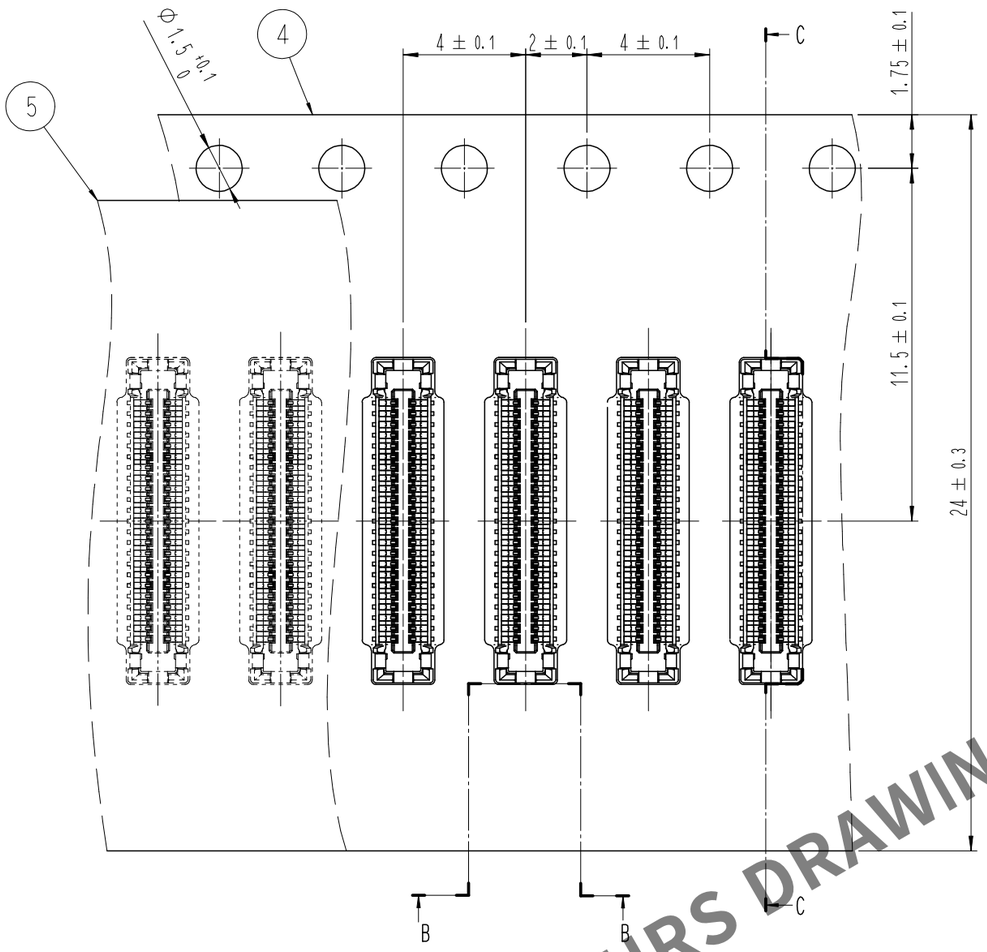


## C-C (5:1)

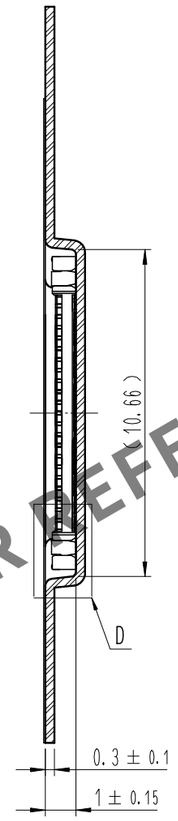


## STYLE AND DIMENTION OF REEL (FREE)

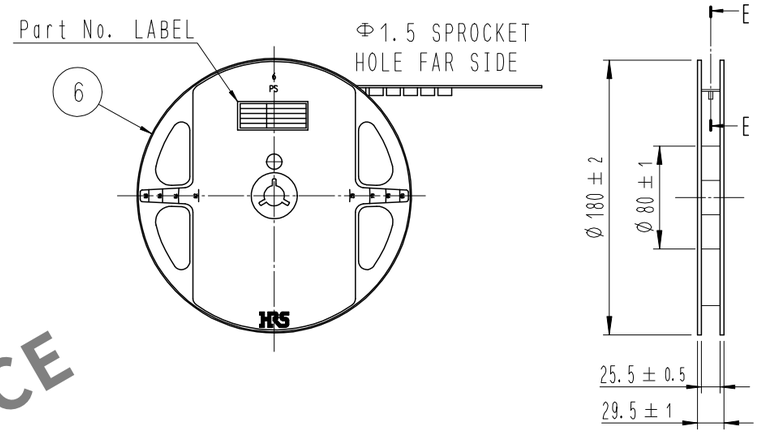


## E-E (FREE)

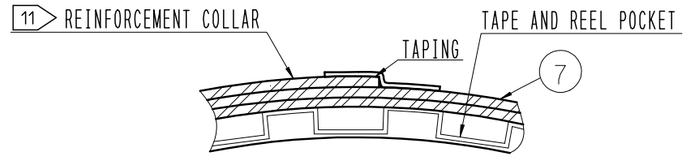


## B-B (5:1)

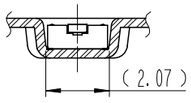


DIRECTION OF UNREELING

## D (10:1)

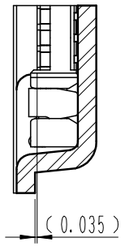


## DETAIL OF PART No. LABEL

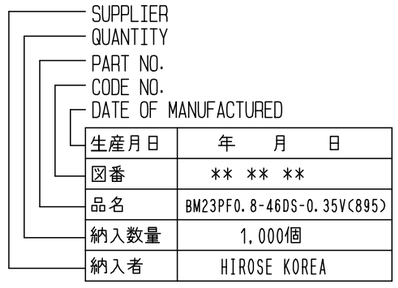


| | |
|---|---|
| 生産月日 | 年　月　日 |
| 図番 | ** ** ** |
| 品名 | BM23PF0.8-46DS-0.35V(895) |
| 納入数量 | 1,000個 |
| 納入者 | HIROSE KOREA |

## 10 TAPING(FREE)

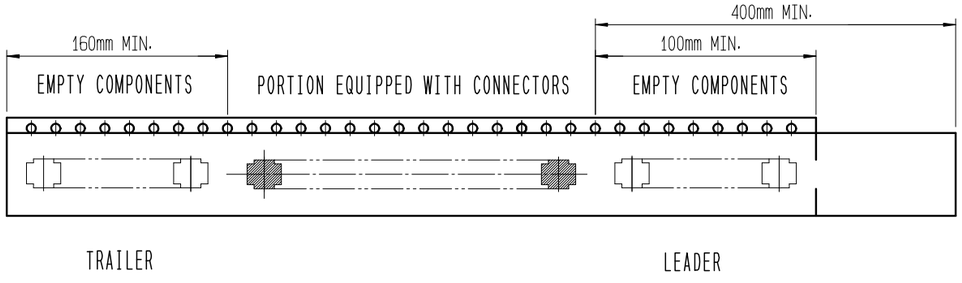


7 . PER REEL 1,000 CONNECTORS.
8 . THE DIMENSIONS IN PARENTHESES ARE FOR REFERENCE.
9 . REFER TO JIS C 0806, IEC-60286-3 (PACKAGING OF COMPONENTS FOR AUTOMATIC HANDLING)
10 . AFTER PACKAGING, ROLL 2 METERS OF THE REINFORCEMENT COLLAR TO OUTER CIRCUMFERENCE OF TAPE AND REEL POCKET, AND TAPE DOWN AT THE END THE COLLAR.

HRS DRAWING FOR REFERENCE

| | | | |
|---|---|---|---|
| SCALE 10:1 | DRAWING NO. EDC3-632258 | PART NO. BM23PF0.8-46DS-0.35V(895) | |
| UNITS mm | HRS HIROSE KOREA CO.,LTD. | CODE NO CL 6644-0089-8-895 | 3/3 |