Apr.1.2024 Copyright 2024 HIROSE ELECTRIC CO., LTD. All Rights Reserved.
In case of consideration for using Automotive equipment / device which demand high reliability, kindly contact our sales window

	△數 COUNT	訂正事項 DESCRIPTION OF REVISIONS	擔當 B Y	檢圖 CHKD	年月日 DATE		△數 COUNT	訂正事項 DESCRIPTION OF REVISIONS	擔當 B Y	檢圖 CHKD	年月日 DATE
1	1	RE-6-1150	K.I.Y	L.S.M	18. 07. 04						. .
					. .						. .
					. .						. .

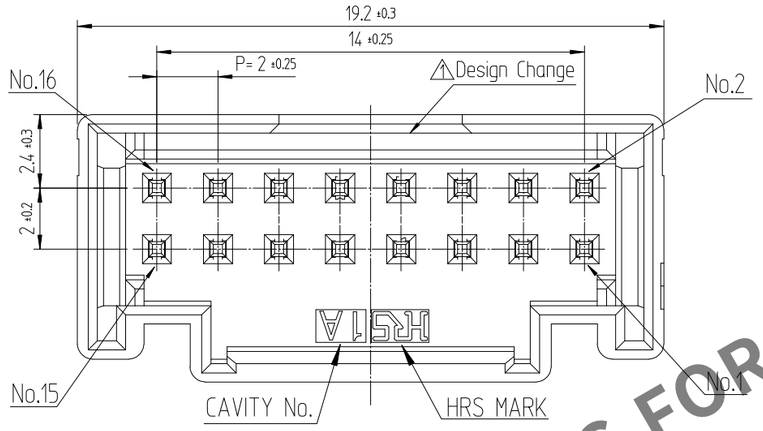

RECOMMENDED LAND PATTERN (FREE)
(PCB THICKNESS t=1.6mm)

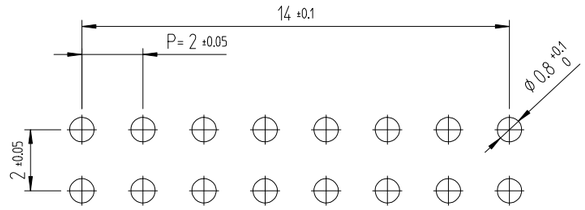

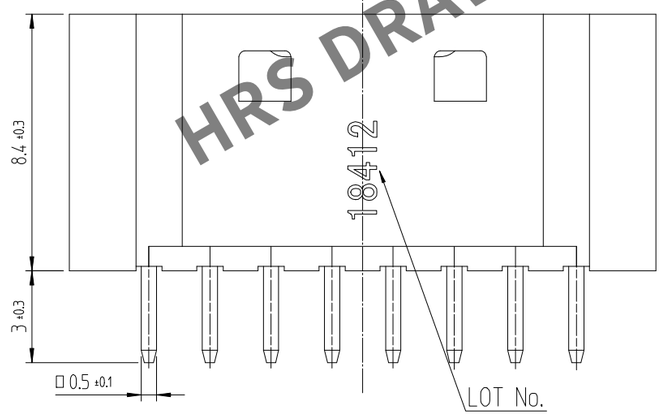

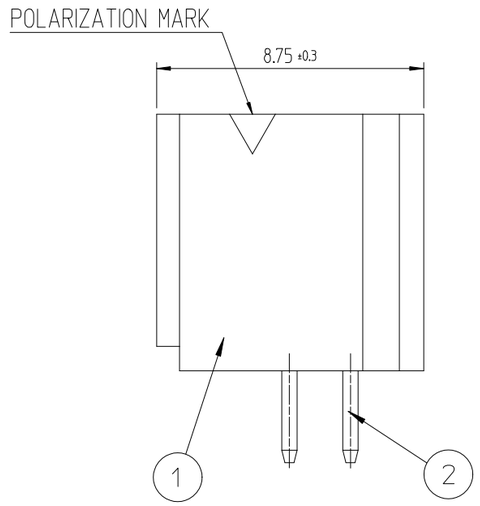

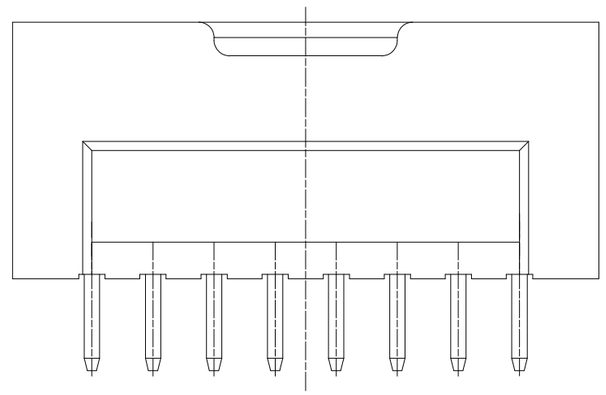

ENGAGEMENT FIGURE (2:1)

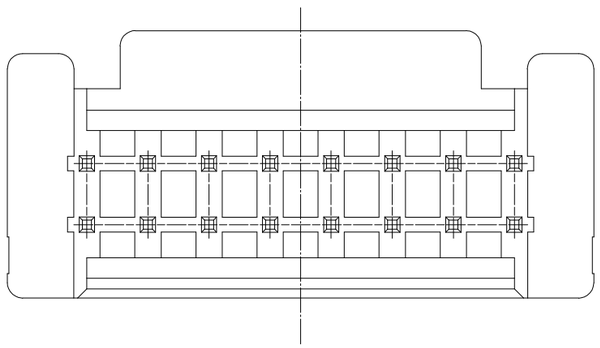

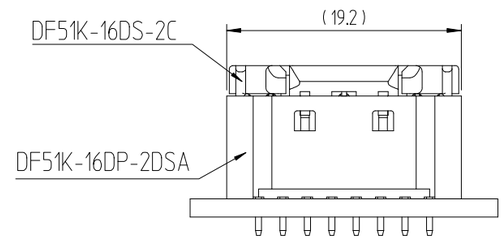

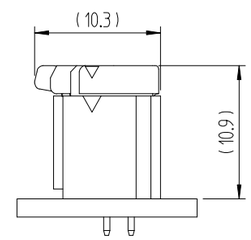

HRS DRAWING FOR REFERENCE

NOTE 1. 1PACK CONTAINS 100PCS.
2. ( )DIMENSIONS ARE ONLY REFERENCE.

NO.	MATERIAL	FINISH,REMARKS
1	PBT	UL94V-0, BLACK
2	BRASS	TIN PLATING 1μm MIN, OVER NICKEL 0.5μm MIN

CODE NO. (OLD)	DRAWN	DESIGNED	CHECKED	APPROVED	RELEASED
	CHOI 17.12.22 J.S	CHOI 17.12.22 J.S	LIM 17.12.22 S.M	KANG 17.12.22 T.S	

SCALE 5:1	DRAWING NO. EDC3-632463	PART NO. DF51K-16DP-2DSA (800)
UNITS mm	HRS HIROSE KOREA CO.,LTD.	CODE NO. CL 6652-0012-8-800 — 1/1