Apr.1.2024 Copyright 2024 HIROSE ELECTRIC CO., LTD. All Rights Reserved.
In case of consideration for using Automotive equipment / device which demand high reliability, kindly contact our sales window

	△數 COUNT	訂正事項 DESCRIPTION OF REVISIONS	擔當 B Y	檢圖 CHKD	年月日 DATE		△數 COUNT	訂正事項 DESCRIPTION OF REVISIONS	擔當 B Y	檢圖 CHKD	年月日 DATE
1	1	RE-6-1150	K.I.Y	L.S.M	18. 07. 04	△					. .
2	1	RE-6-1579	K.I.Y	L.S.M	20. 01. 23	△					. .
△					. .	△					. .

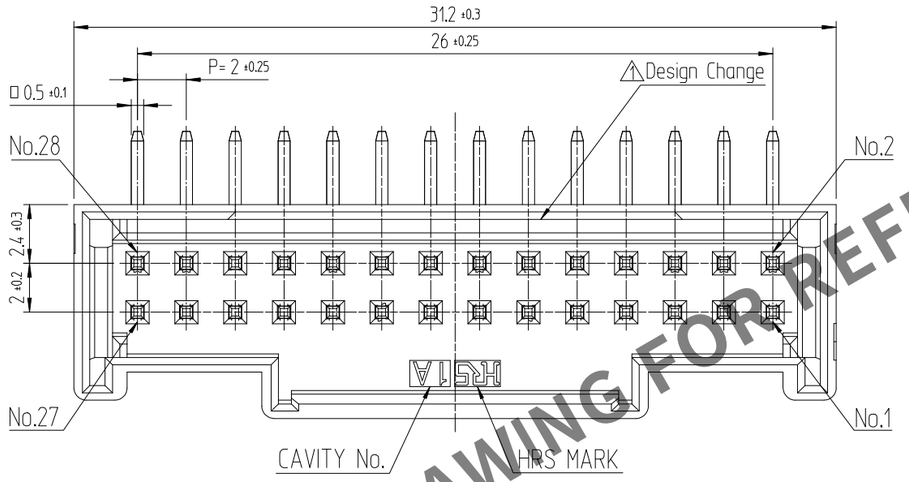

RECOMMENDED LAND PATTERN (FREE)
(PCB THICKNESS t=1.6mm)

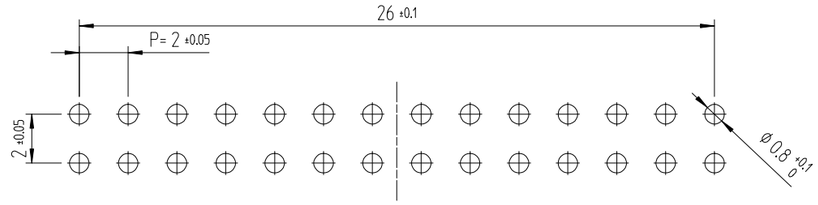

HRS DRAWING FOR REFERENCE

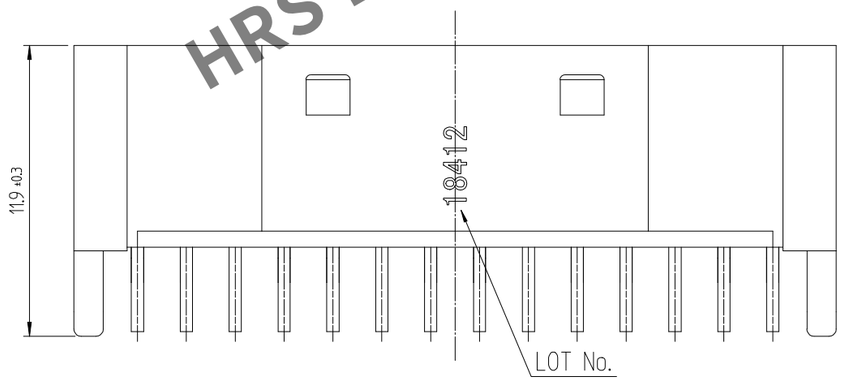

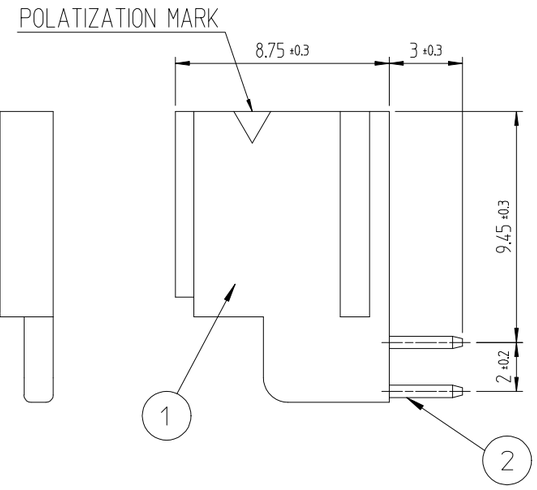

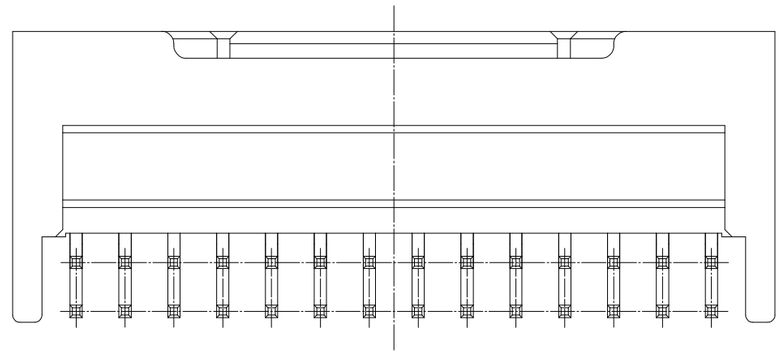

ENGAGEMENT FIGURE (2:1)

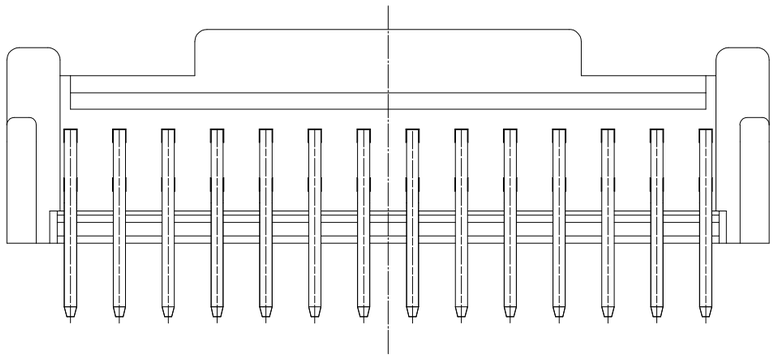

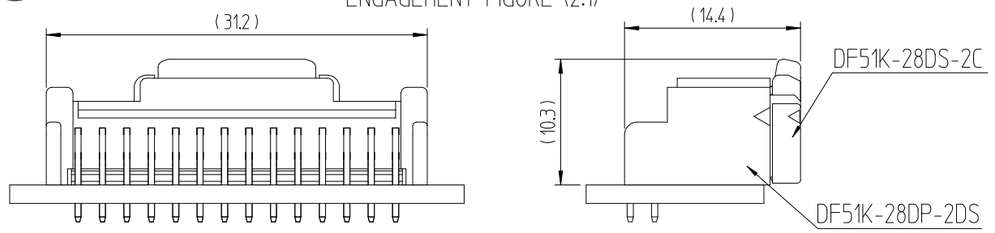

NOTE 1. 1PACK CONTAINS 90PCS.
2. ( )DIMENSIONS ARE ONLY REFERENCE.
△2 3. UL(File No. E132750) AUTHORIZATION ARTICLE.
C-UL(File No. E132750) AUTHORIZATION ARTICLE.

NO.	MATERIAL	FINISH,REMARKS	NO.	MATERIAL	FINISH,REMARKS
1	PBT	UL94V-0, BLACK	2	BRASS	TIN PLATING 1μm MIN, OVER NICKEL 0.5μm MIN

CODE NO. (OLD)	DRAWN	DESIGNED	CHECKED	APPROVED	RELEASED
	CHOI 18.03.02 J.S	CHOI 18.03.02 J.S	LIM 18.03.02 S.M	KANG 18.03.02 T.S	ENG 20. 02. 12 DEPT

SCALE 4:1	DRAWING NO. EDC3-632488	PART NO. DF51K-28DP-2DS (800)
UNITS mm	HRS HIROSE KOREA CO.,LTD.	CODE NO. CL 6652-0046-0-800 — 1/1