Apr.1.2024 Copyright 2024 HIROSE ELECTRIC CO., LTD. All Rights Reserved.
In case of consideration for using Automotive equipment / device which demand high reliability, kindly contact our sales window correspondents.

	COUNT	DESCRIPTION OF REVISIONS	BY	CHKD	DATE		COUNT	DESCRIPTION OF REVISIONS	BY	CHKD	DATE
1	4	RE-H-01071	T.G	K.A	94.05.19						. .
2	13	RE-H-03064	T.Y	K.A	99.5.7						. .
					. .						. .

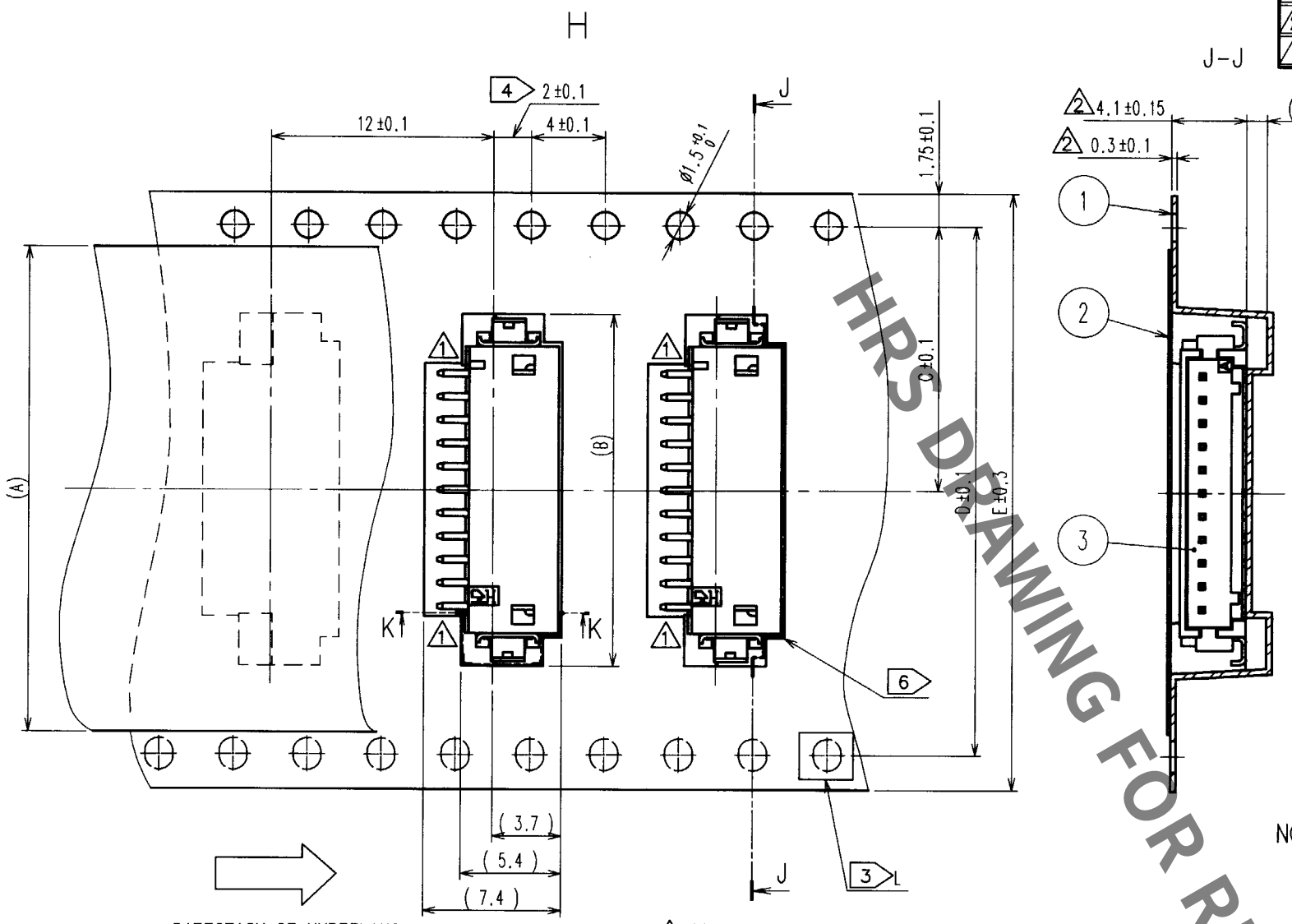

CODE NO.	PART NO.	A	B	C	D	E	F	G
CL536-0301-8-21	DF13A- 2P-1.25H(21)	13.5	7.6	7.5		16	16.4	22.4
CL536-0302-0-21	DF13A- 3P-1.25H(21)	13.5	8.85	7.5		16	16.4	22.4
CL536-0303-3-21	DF13A- 4P-1.25H(21)	21.5	10.1	11.5		24	24.4	30.4
CL536-0304-6-21	DF13A- 5P-1.25H(21)	21.5	11.35	11.5		24	24.4	30.4
CL536-0305-9-21	DF13A- 6P-1.25H(21)	21.5	12.6	11.5		24	24.4	30.4
CL536-0306-1-21	DF13A- 7P-1.25H(21)	21.5	13.85	11.5		24	24.4	30.4
CL536-0307-4-21	DF13A- 8P-1.25H(21)	21.5	15.1	11.5		24	24.4	30.4
CL536-0308-7-21	DF13A- 9P-1.25H(21)	21.5	16.35	11.5		24	24.4	30.4
CL536-0309-0-21	DF13A-10P-1.25H(21)	21.5	17.6	11.5		24	24.4	30.4
CL536-0310-9-21	DF13A-11P-1.25H(21)	26	18.85	14.2	28.4	32	32.4	38.4
CL536-0311-1-21	DF13A-12P-1.25H(21)	26	20.1	14.2	28.4	32	32.4	38.4
CL536-0313-7-21	DF13A-14P-1.25H(21)	26	22.6	14.2	28.4	32	32.4	38.4
CL536-0314-0-21	DF13A-15P-1.25H(21)	37	23.85	20.2	40.4	44	44.4	50.4

5 DETAIL OF PART NO. LABEL

DATE OF MANUFACTURED	** ** **
CODE NO.	
PART NO.	DF13A-*P-1.25H(21)
QUANTITY	1000 KO
SUPPLIER	HIROSE ELECTRIC CO.,LTD.

NOTES 1 : 1REEL:1000 CONNECTORS.
2 : AT THE BEGINNING OF THE REEL,30 COMPONENTS SHALL BE EMPTY.
AT THE END OF THE REEL, 20 COMPONENTS SHALL BE EMPTY.
3: WHEN THE TAPE WIDTH IS 32 OR 44mm,SPROCKET HOLES SHALL BE SET ON BOTH SIDES OF REEL AS SHOWN ON THIS DRAWING.
4: WHEN THE TAPE WIDTH IS 44mm OR OVER, THE TOLERANCE SHALL BE 2±0.15.
2 5: DETAIL OF PART NO. LABEL IS WRITTEN IN JAPANESE.
2 6: CONFIGURATION OF COMPONENT COMPARTEMENT SHALL BE CHANGED TO FIGURE SHOW BELOW.

BEFORE MODIFIED AFTER MODIFIED

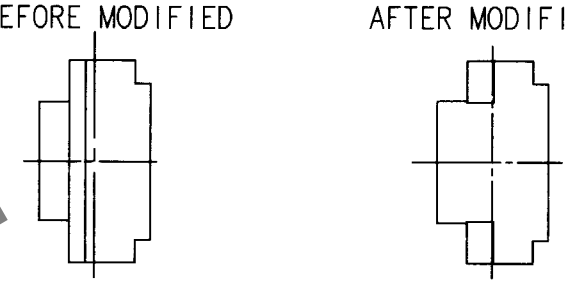

STYLE AND DIMENSION OF REEL

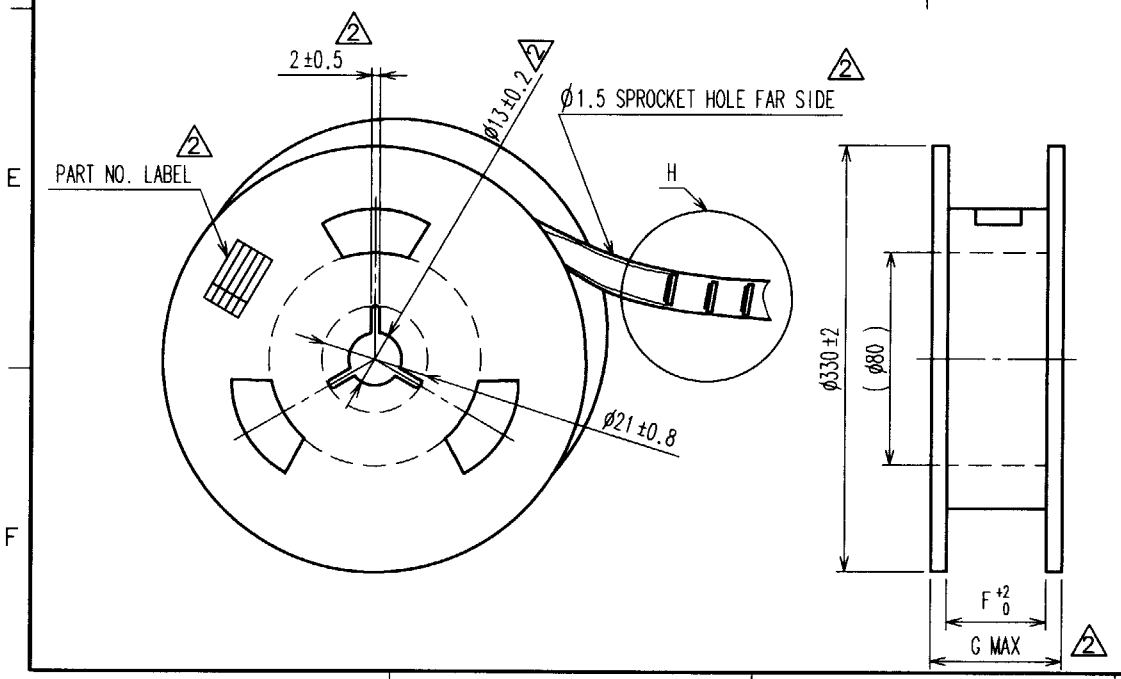

L(10:1)

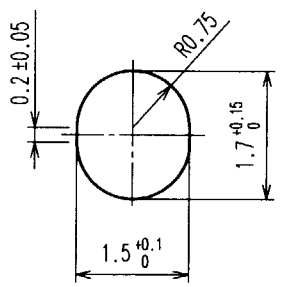

NO.	MATERIAL	FINISH, REMARKS	NO.	MATERIAL	FINISH, REMARKS
2	POLYESTER	CLEAR(COVER TAPE)			
1	PS 2	CLEAR(EMBOSSED CARRIER TAPE)	3	DF13A-*P-1.25H	

CODE NO.(OLD)	DRAWN	DESIGNED	CHECKED	APPROVED	RELEASED
	K.Midorikawa '93 2 9	K.Midorikawa '93 2 9	K.Akiyama '93 2 9	M.Yamamoto '93 2 9	. .

SCALE FR:EE
UNITS mm
DRAWING NO. EDC3-083666-02 2
HRS HIROSE ELECTRIC CO., LTD
PART NO. DF13A-*P-1.25H(21)
CODE NO. CL536-
1/1

TO

HRS DRAWING FOR REFERENCE