Apr.1.2024 Copyright 2024 HIROSE ELECTRIC CO., LTD. All Rights Reserved.
In case of consideration for using Automotive equipment / device which demand high reliability, kindly contact our sales window correspondents.

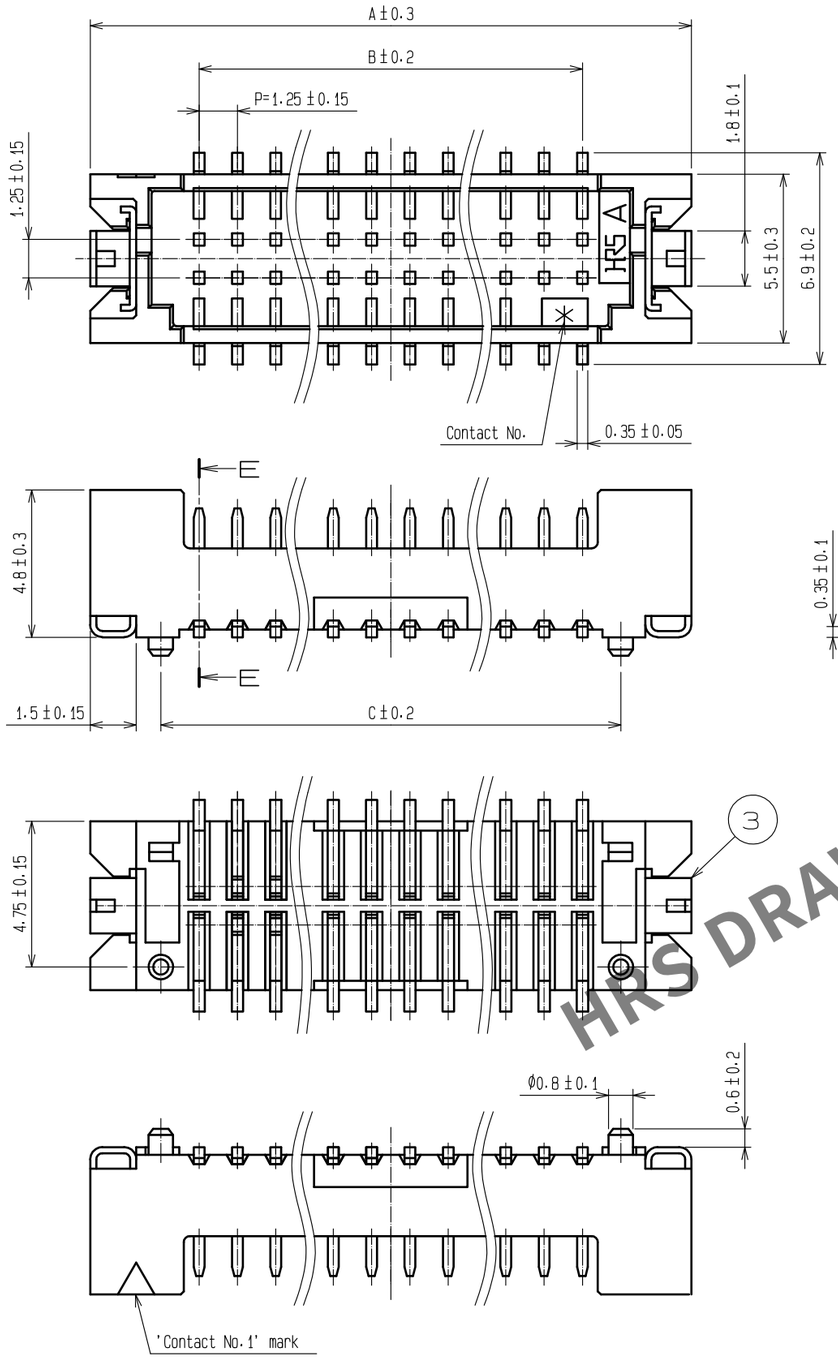

Recommended pattern

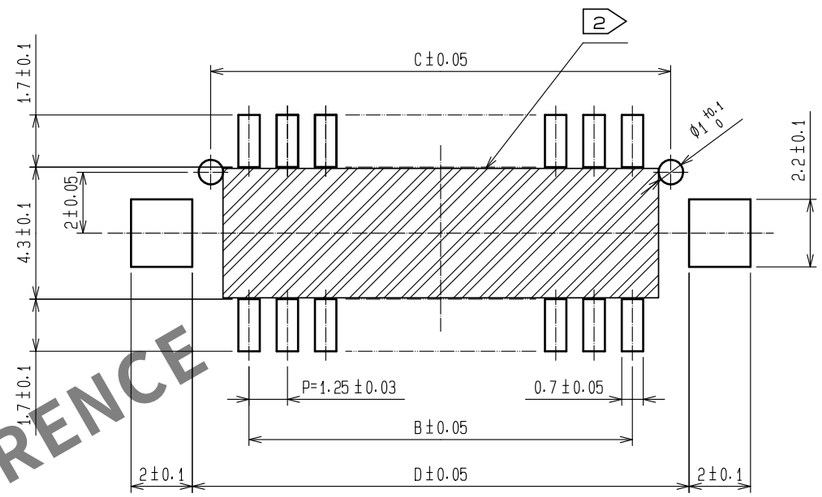

Mated connectors

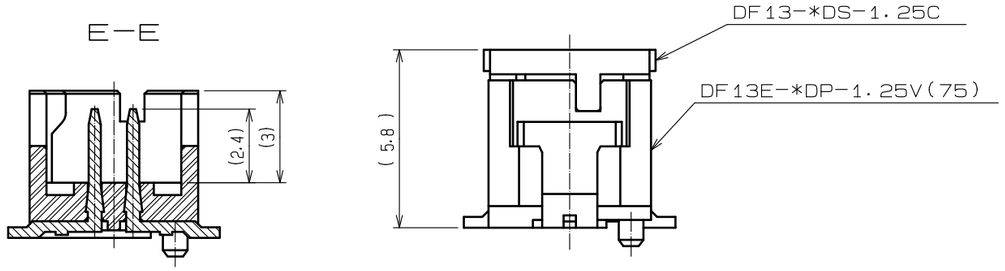

Notes 1 : Lead co-planality include reinforced metal fittings shall be 0.1mm MAX.
2 : If there are pattern and a bia hole on ▨ part,
there is a possibility that it will make contact with the leads.

HRS DRAWING FOR REFERENCE

Part No.	Number of contacts	Code No.	A	B	C	D
DF13E-10DP-1.25V(75)	10	CL536-0566-0-75	12.1	5.0	7.5	8.7
DF13E-20DP-1.25V(75)	20	CL536-0567-0-75	18.35	11.25	13.75	14.95
DF13E-30DP-1.25V(75)	30	CL536-0568-0-75	24.60	17.50	20.00	21.20

NO.	MATERIAL	FINISH , REMARKS	NO.	MATERIAL	FINISH , REMARKS
2	Brass	Lead area:Tin-copper plated 1μm MIN Under plating:Nickel 0.5μm MIN	5	S.PVC	Gray
			4	R.PVC	Electrostatic protection
1	Polyamide	Beige.UL94V-0	3	Phosphor bronze	Tin plated 1μm MIN

UNITS	SCALE	COUNT	DESCRIPTION OF REVISIONS	DESIGNED	CHECKED	DATE
mm	5 : 1	0				

HRS HIROSE ELECTRIC CO., LTD.

APPROVED	HS.OKAWA	18.02.16	DRAWING NO.	EDC-367983-75-00
CHECKED	TS.FUKUSHIMA	18.02.16	PART NO.	DF13E-*DP-1.25V(75)
DESIGNED	TS.KUMAZAWA	18.02.16	CODE NO.	CL536-
DRAWN	MK.INOUE	18.02.16		0 1/2

Apr.1.2024 Copyright 2024 HIROSE ELECTRIC CO., LTD. All Rights Reserved.
In case of consideration for using Automotive equipment / device which demand high reliability, kindly contact our sales window correspondents.

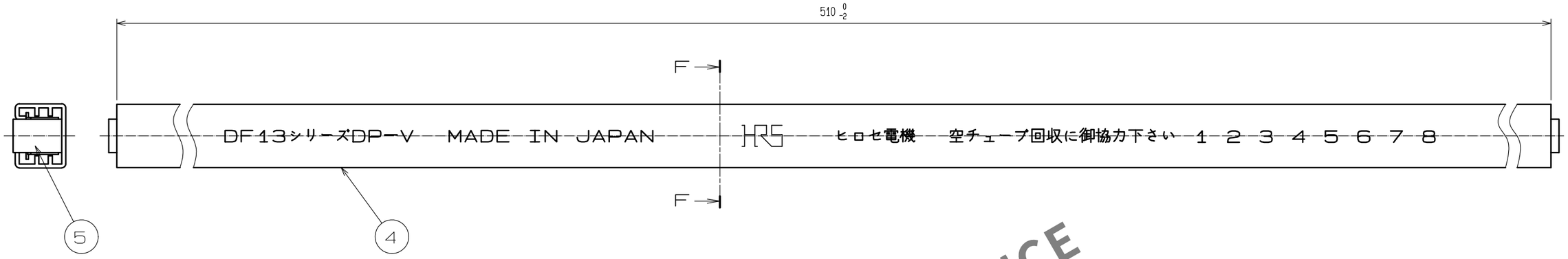

F－F（10：1）

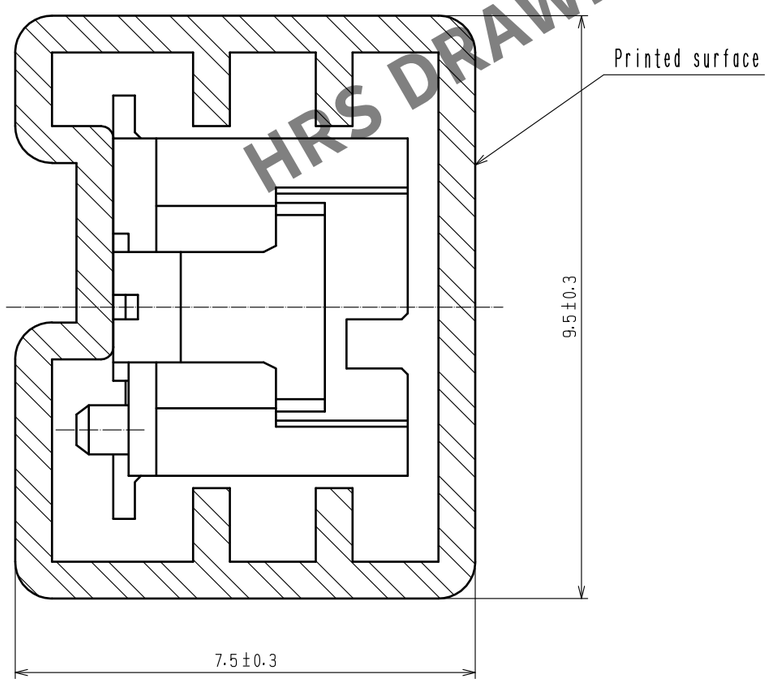

Part No.	Code No.	Number of connectors
DF13E-10DP-1.25V(75)	CL536-0566-0-75	40
DF13E-20DP-1.25V(75)	CL536-0567-0-75	26
DF13E-30DP-1.25V(75)	CL536-0568-0-75	19

Notes 3 : The tube has one stopper at each end.
4 : Minimum unit of purchase shall be the quantity of connectors in tube.

HRS DRAWING FOR REFERENCE

HRS	DRAWING NO.	EDC-367983-75-00
	PART NO.	DF13E-*DP-1.25V(75)
	CODE NO.	CL536-

0 2/2