Apr.1.2024 Copyright 2024 HIROSE ELECTRIC CO., LTD. All Rights Reserved.
In case of consideration for using Automotive equipment / device which demand high reliability, kindly contact our sales window correspondents.

HRS DRAWING FOR REFERENCE

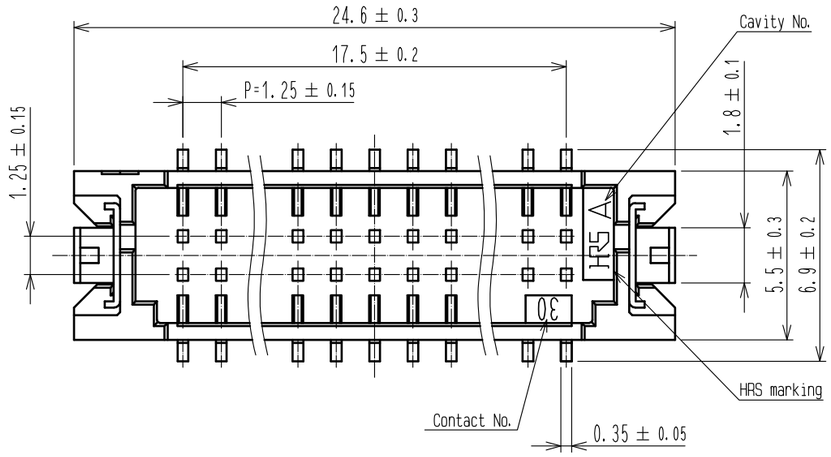

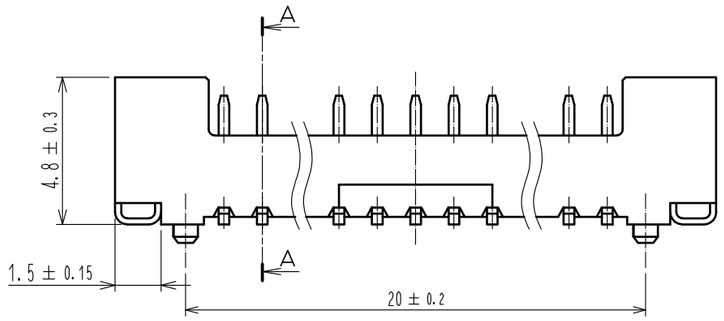

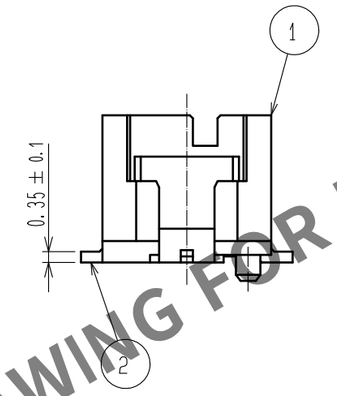

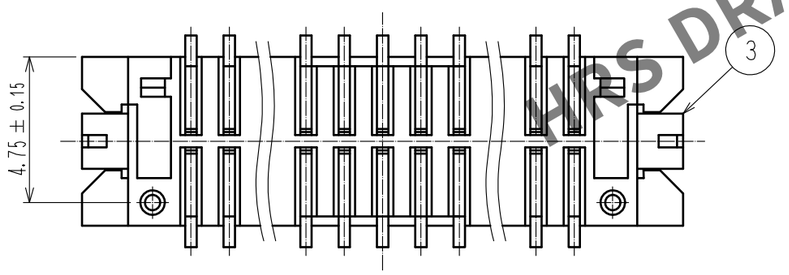

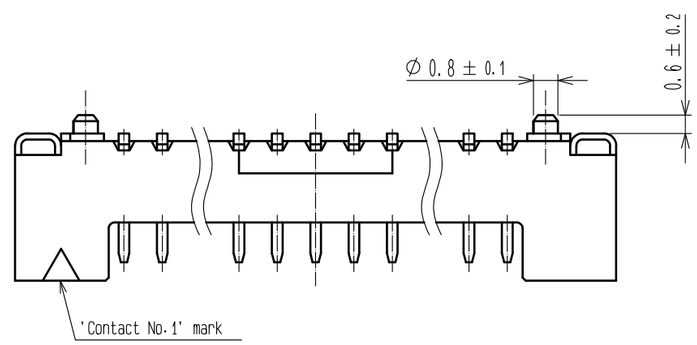

Recommended pattern(4:1)

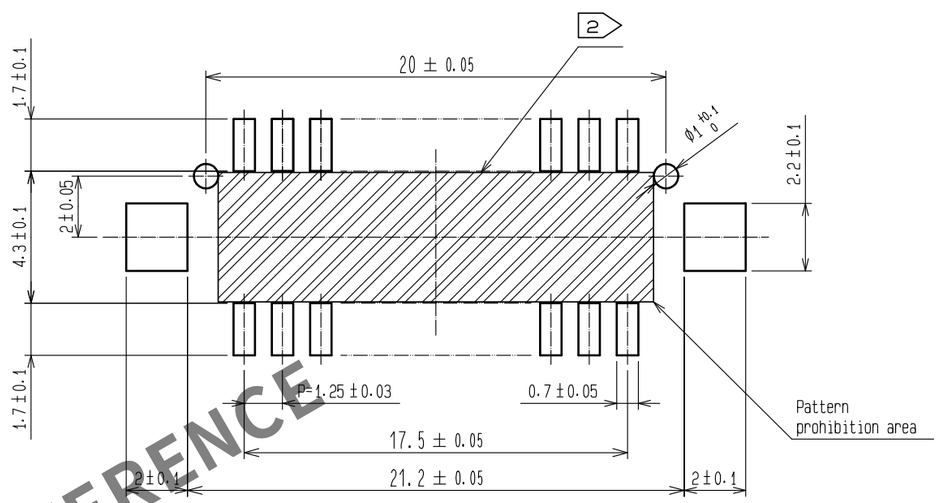

Mated connectors

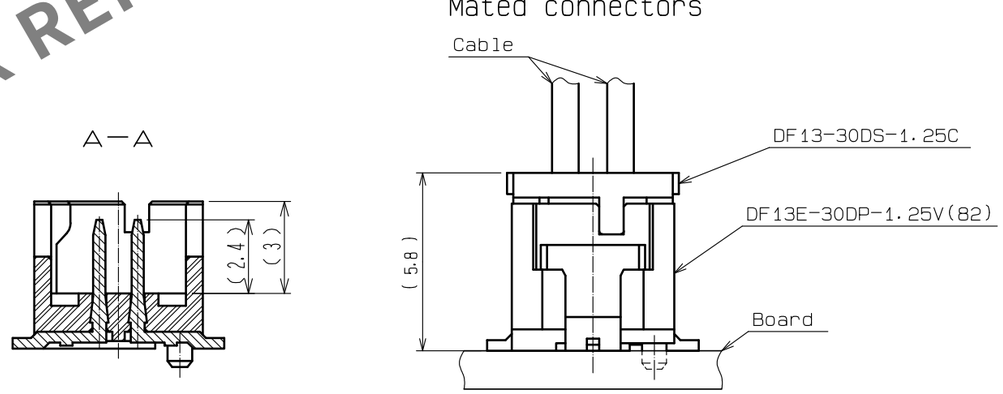

A—A

Notes 1 : Lead Co-planality include reinforced metal fittings shall be 0.1mm MAX.
2 If there are pattern and a via hole on ▨ part,
there is a possibility that it will make contact with the leads.

NO.	MATERIAL	FINISH , REMARKS	NO.	MATERIAL	FINISH , REMARKS
2	Brass	Contact area:Gold plated 0.76μm MIN Lead area:Tin-Copper plated 1μm MIN Under plating:Nickel 1μm MIN	6	Polyamide	Beige, UL94V-0
			5	Polyester	Clear(Cover tape)
			4	PS	Clear(Embossed carrier tape)
1	Polyamide	Beige, UL94V-0	3	Phosphor bronze	Tin plated 1μm MIN

UNITS	SCALE		COUNT	DESCRIPTION OF REVISIONS	DESIGNED	CHECKED	DATE
mm	5 : 1	⚠0					

HIROSE ELECTRIC CO., LTD.

APPROVED	HS. OKAWA	17. 11. 01
CHECED	TS. FUKUSHIMA	17. 11. 01
DESIGNED	HT. SATO	17. 11. 01
DRAWN	SN. MIWA	17. 11. 01

DRAWING NO.	EDC-367361-82-00
PART NO.	DF13E-30DP-1.25V(82)
CODE NO.	CL536-0568-0-82 ⚠0 1/2

Apr.1.2024 Copyright 2024 HIROSE ELECTRIC CO., LTD. All Rights Reserved.
In case of consideration for using Automotive equipment / device which demand high reliability, kindly contact our sales window correspondents.

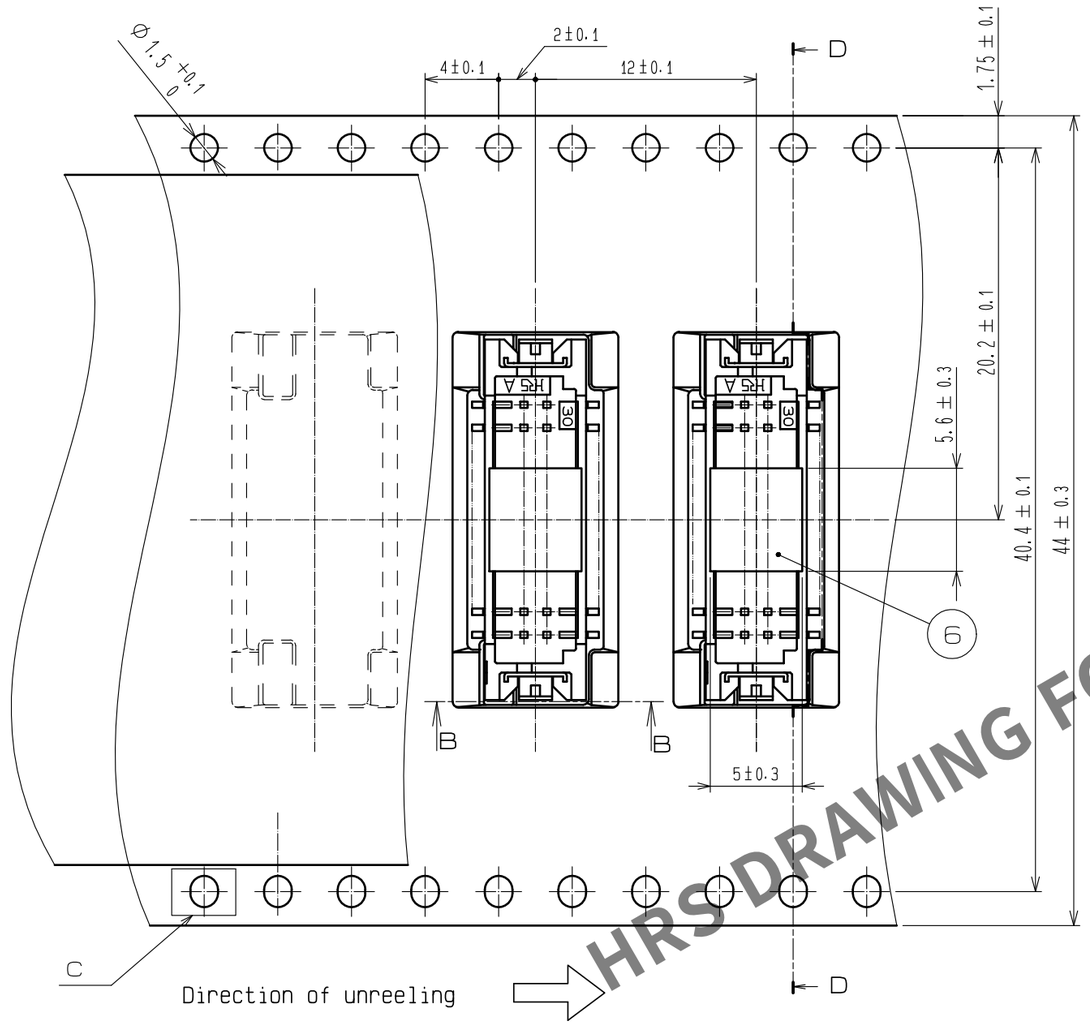

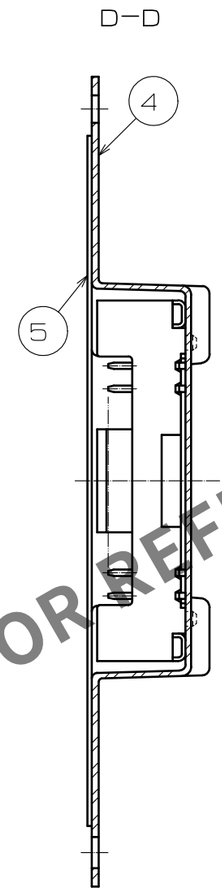

Style and dimension of reel

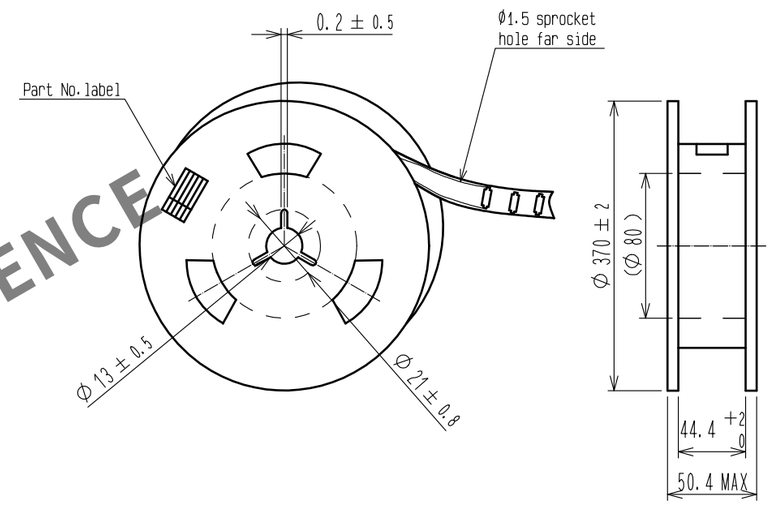

HRS DRAWING FOR REFERENCE

C (10 : 1)

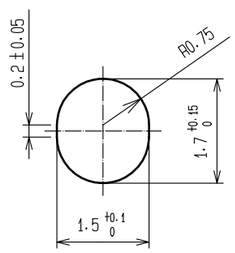

B–B

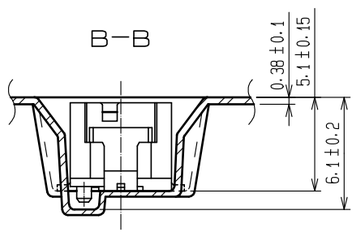

5 Detail of Part No. label

- Supplier
- Quantity
- Part No.
- Code No.
- Date of manufactured

生産月日	年　月　日
図番	CL536-0568-0-82
品番	DF13E-30DP-1.25V(82)
納入数量	1000ko
納入者	ヒロセ電機(株)

Notes 3 : 1 reel 1000 connectors.
4 : At the beginning of the reel, 30 components shall be empty.
At the end of the reel, 20 components shall be empty.
5 Detail of part No. label is written in japanese.

HRS	DRAWING NO.	EDC-367361-82-00
	PART NO.	DF13E-30DP-1.25V(82)
	CODE NO.	CL536-0568-0-82 ⓪ 2/2