May.1.2024 Copyright 2024 HIROSE ELECTRIC CO., LTD. All Rights Reserved.
In case of consideration for using Automotive equipment / device which demand high reliability, kindly contact our sales window correspondents.

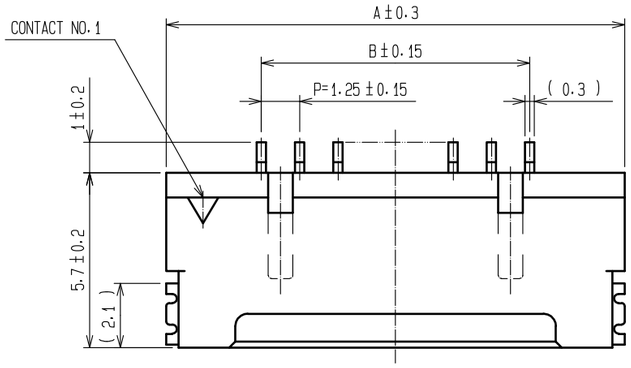

2 APPLICATION PATTERN

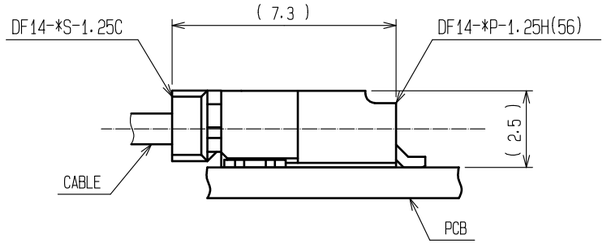

PART NO.	HRS NO.	CONTACTS	A	B	C	D	E	F
DF14- 2P-1.25H(56)	CL538-0021-4-56	2	7.45	1.25	2.95	3.65	6.45	8.05
DF14- 3P-1.25H(56)	CL538-0022-7-56	3	8.70	2.50	4.20	4.90	7.70	9.30
DF14- 4P-1.25H(56)	CL538-0023-0-56	4	9.95	3.75	5.45	6.15	8.95	10.55
DF14- 5P-1.25H(56)	CL538-0024-2-56	5	11.20	5.00	6.70	7.40	10.20	11.80
DF14- 6P-1.25H(56)	CL538-0025-5-56	6	12.45	6.25	7.95	8.65	11.45	13.05
DF14- 7P-1.25H(56)	CL538-0026-8-56	7	13.70	7.50	9.20	9.90	12.70	14.30
DF14- 8P-1.25H(56)	CL538-0027-0-56	8	14.95	8.75	10.45	11.15	13.95	15.55
DF14- 9P-1.25H(56)	CL538-0028-3-56	9	16.20	10.00	11.70	12.40	15.20	16.80
DF14-10P-1.25H(56)	CL538-0029-6-56	10	17.45	11.25	12.95	13.65	16.45	18.05
DF14-15P-1.25H(56)	CL538-0084-4-56	15	23.70	17.50	19.20	19.90	22.70	24.30
DF14-20P-1.25H(56)	CL538-0089-8-56	20	29.95	23.75	25.45	26.15	28.95	30.55
DF14-25P-1.25H(56)	CL538-0094-8-56	25	36.20	30.00	31.70	32.40	35.20	36.80
DF14-30P-1.25H(56)	CL538-0020-1-56	30	42.45	36.25	37.95	38.65	41.45	43.05

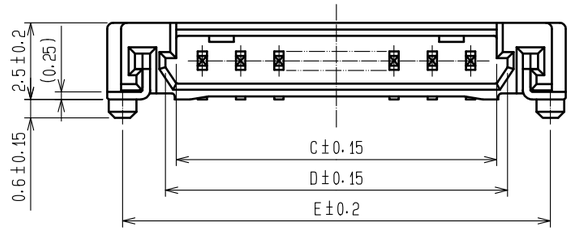

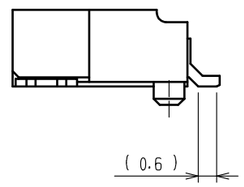

3 2 CONTACTS

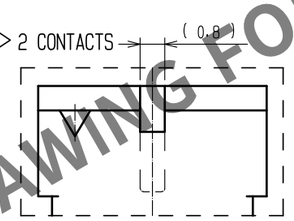

3 3 CONTACTS

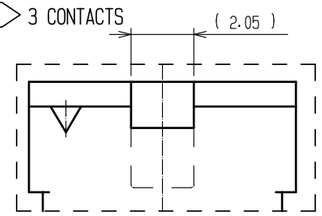

4 RECOMMENDED PATTERN

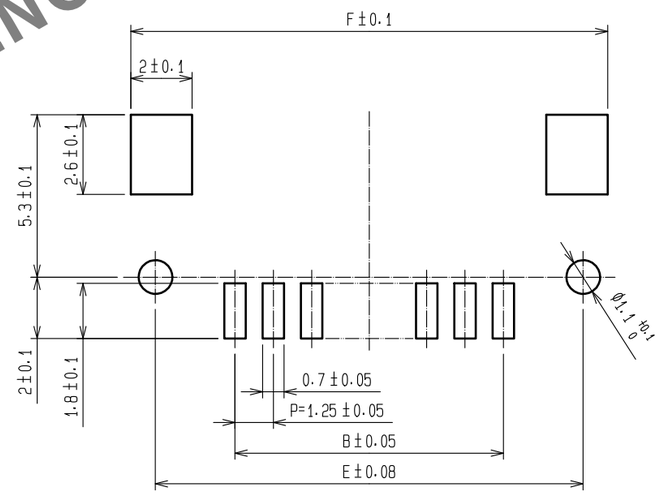

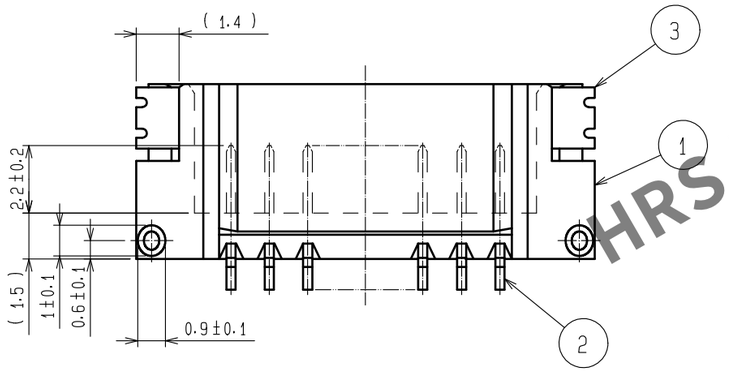

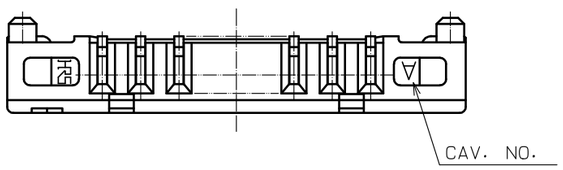

NOTE 1. LEAD CO-PLANALITY INCLUDE REINFORCED METAL FITTINGS SHALL BE 0.1 MAX.
2 WHEN THIS CONNECTOR MATES WITH DF14-*S-1.25C , THE MATTING LENGTH IS 7.3mm.
3 FOR CONNECTORS , 2 OR 3 CONTACTS , SIMPLIFIED LOCK HOLE SHALL BE SET AT THE CENTER OF HOUSING.
△1 4 RECOMMENDED METAL MASK THICKNESS:0.15mm
OPEN AREA RETIO:100%

NO.	MATERIAL	FINISH , REMARKS
3	PHOSPHOR BRONZE	TIN-COPPER PLATED 1μm min UNDER PLATING:NICKEL PLATED 0.5μm min
2	BRASS	CONTACT AREA:GOLD PLATED 0.1μm min LEAD AREA:TIN-COPPER PLATED 1μm min UNDER PLATING:NICKEL PLATED 1μm min
1	POLYAMIDE	BEIGE, UL94V-0

NO.	MATERIAL	FINISH , REMARKS
5	POLYESTER	CLEAR(COVER TAPE)
4	PS △1	CLEAR (EMBOSSED CARRIER TAPE)

UNITS	SCALE		COUNT	DESCRIPTION OF REVISIONS	DESIGNED	CHECKED	DATE
mm	5 : 1	△1	2	DIS-H-00006464	HK. HAYASHI	SZ. ONO	20201013

HRS HIROSE ELECTRIC CO., LTD.

APPROVED	: KJ. KATAYOSE	20050105	DRAWING NO.	EDC3-160307-21
CHECKED	: TY. OMA	20050105	PART NO.	DF14-*P-1.25H(56)
DESIGNED	: TS. KUMAZAWA	20050105	CODE NO.	CL538- △1 1/2
DRAWN	: TS. KUMAZAWA	20050105		

HRS DRAWING FOR REFERENCE

May.1.2024 Copyright 2024 HIROSE ELECTRIC CO., LTD. All Rights Reserved.
In case of consideration for using Automotive equipment / device which demand high reliability, kindly contact our sales window correspondents.

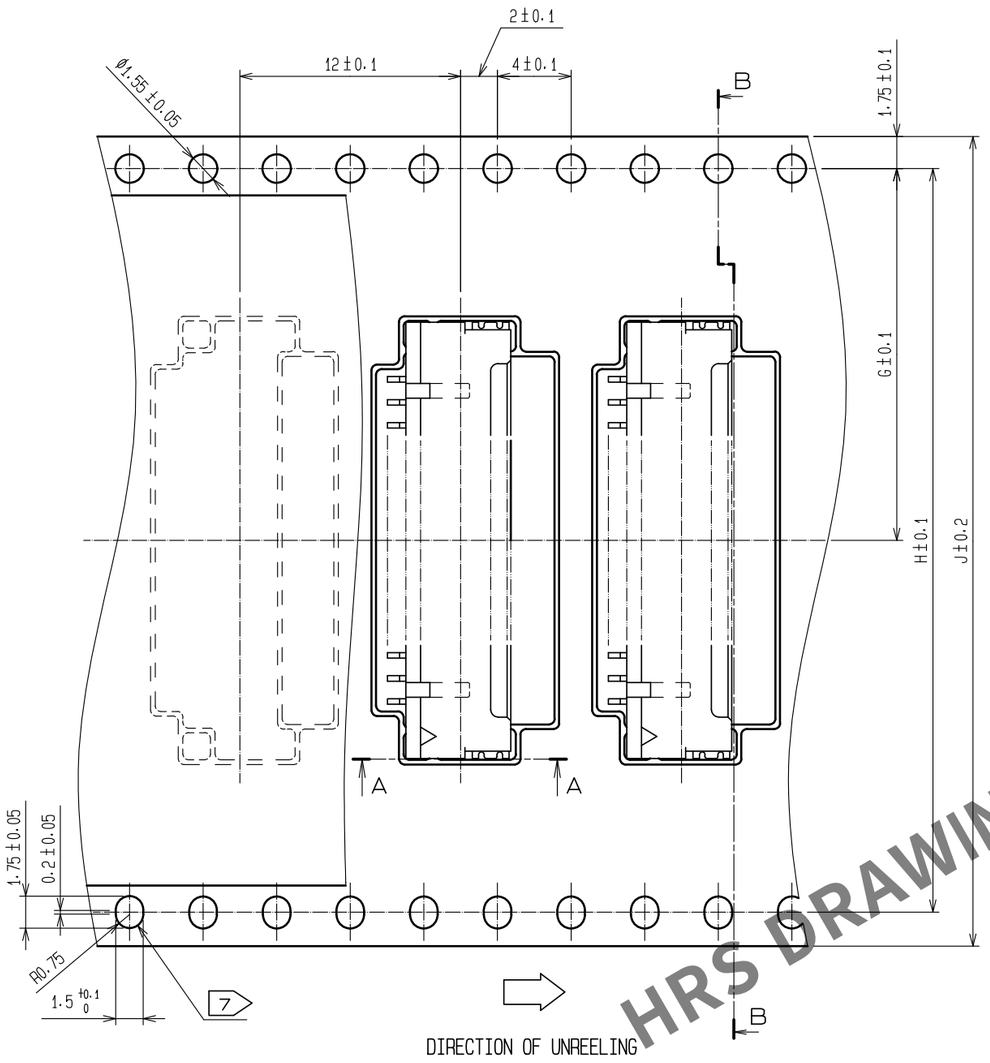

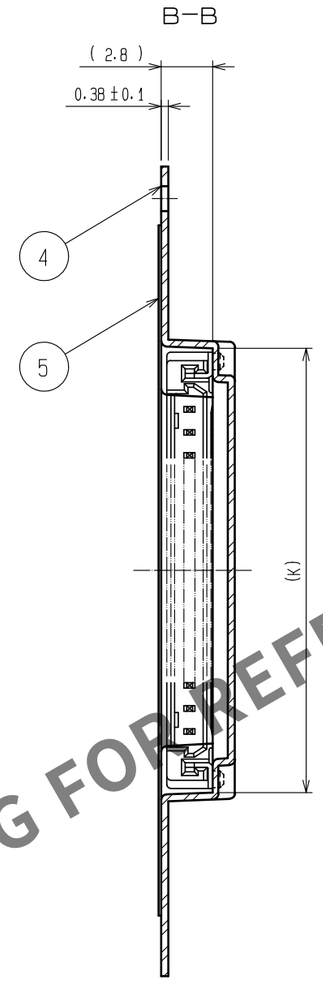

PART NO.	CONTACTS	G	H	J	K	M
DF14- 2P-1.25H(56)	2	7.5	-	16	7.85	16.4
DF14- 3P-1.25H(56)	3	7.5	-	16	9.1	16.4
DF14- 4P-1.25H(56)	4	11.5	-	24	10.35	24.4
DF14- 5P-1.25H(56)	5	11.5	-	24	11.6	24.4
DF14- 6P-1.25H(56)	6	11.5	-	24	12.85	24.4
DF14- 7P-1.25H(56)	7	11.5	-	24	14.1	24.4
DF14- 8P-1.25H(56)	8	11.5	-	24	15.35	24.4
DF14- 9P-1.25H(56)	9	11.5	-	24	16.6	24.4
DF14-10P-1.25H(56)	10	11.5	-	24	17.85	24.4
DF14-15P-1.25H(56)	15	20.2	40.4	44	24.1	44.4
DF14-20P-1.25H(56)	20	20.2	40.4	44	30.35	44.4
DF14-25P-1.25H(56)	25	26.2	52.4	56	36.6	56.4
DF14-30P-1.25H(56)	30	26.2	52.4	56	42.85	56.4

HRS DRAWING FOR REFERENCE

STYLE AND DIMENSION OF REEL

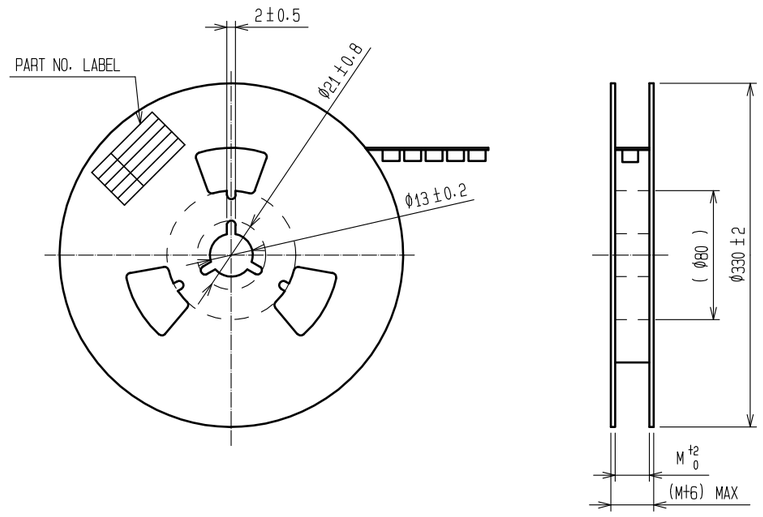

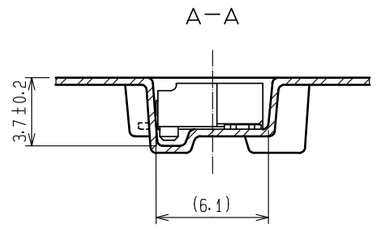

SUPPLIER
QUANTITY
PART NO.
CODE NO.
DATE OF MANUFACTURED

DETAIL OF MANUFACTURED

生産月日	年　月　日
CLコード	538-****-*-56
品名	DF14-*P-1.25H(56)
納入数量	1000個
納入者	ヒロセ電機株式会社

NOTES 5 1 REEL : 1000 CONNECTORS.
6 AT THE BEGINNIG OF THE REEL , 30 COMPONENTS SHALL BE EMPTY.
7 AT THE END OF THE REEL , 20 COMPONENTS SHALL BE EMPTY.
WHEN THE TAPE WIDTH IS 44 TO 56mm , SPROCKET HOLES SHALL BE SET ON BOTH SIDES OF REEL AS SHOWN ON THIS DRAWING.

HRS	DRAWING NO.	EDC3-160307-21
	PART NO.	DF14-*P-1.25H(56)
	CODE NO.	CL538-

1 2/2

FORM HC0011-5-8