	COUNT	DESCRIPTION OF REVISIONS	BY	CHKD	DATE		COUNT	DESCRIPTION OF REVISIONS	BY	CHKD	DATE
△					. .	△					. .
△					. .	△					. .
△					. .	△					. .

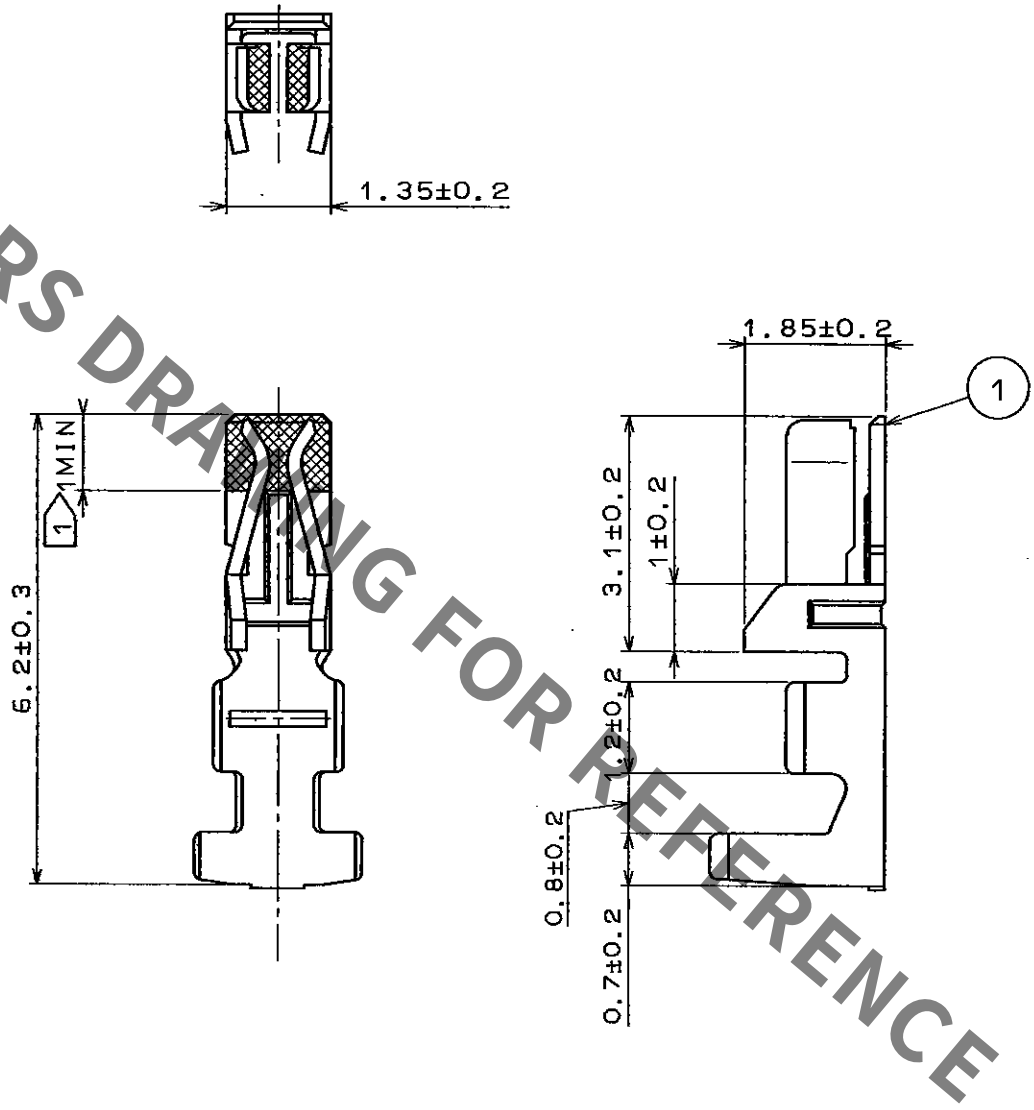

HRS DRAWING FOR REFERENCE

NOTES 1 . GOLD PLATE AREA
NOTES 2 . 100 CONNECTORS ARE IN ONE PACK.

NO.	MATERIAL	FINISH , REMARKS	NO.	MATERIAL	FINISH , REMARKS
			1	PHOSPHOR BRONZE	GOLD PLATING ON CONTACT AREA. (0.2μm)

CODE NO. (OLD)	DRAWN	DESIGNED	CHECKED	APPROVED	RELEASED
	T.Miyazaki 96·10·15	T.Miyazaki 96·10·15	J.Ono '96·10·15	H.Yamamoto 96·10·15	

SCALE 10 : 1	DRAWING NO. EDC4-080088-01	PART NO. DF11-2428SCA
UNITS mm	HRS HIROSE ELECTRIC CO., LTD.	CODE NO. CL543-0551-3 1/1

FORM No. 228

TO

Jul.1.2020 Copyright 2020 HIROSE ELECTRIC CO., LTD. All Rights Reserved.
In case of consideration for using Automotive equipment / device which demand high reliability, kindly contact our sales window correspondents.