May.1.2024 Copyright 2024 HIROSE ELECTRIC CO., LTD. All Rights Reserved.
In case of consideration for using Automotive equipment / device which demand high reliability, kindly contact our sales window correspondents.

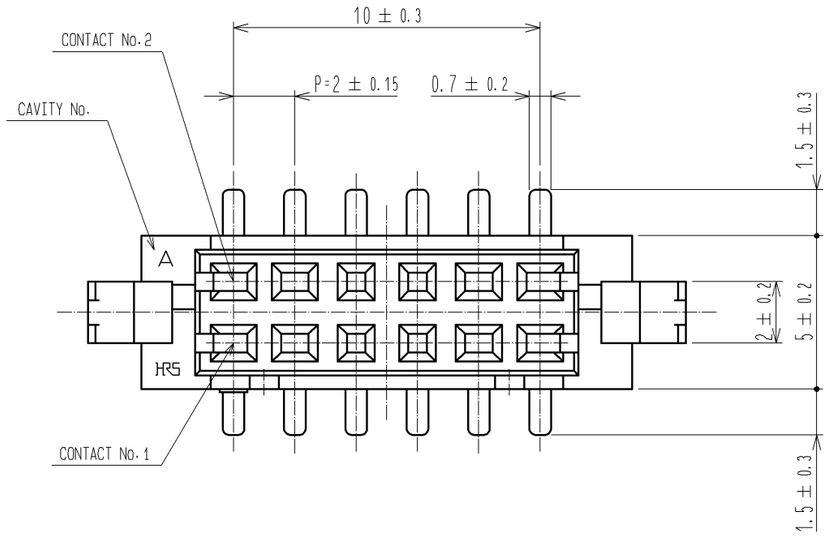

RECOMMENDED PATTERN(2:1)

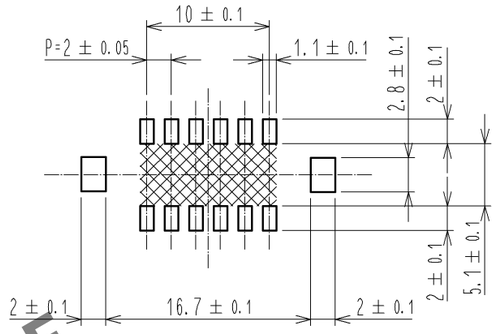

RECOMMENDED METAL MASK
THICKNESS: 0.15 TO 0.2mm
OPENING RATIO: 100%

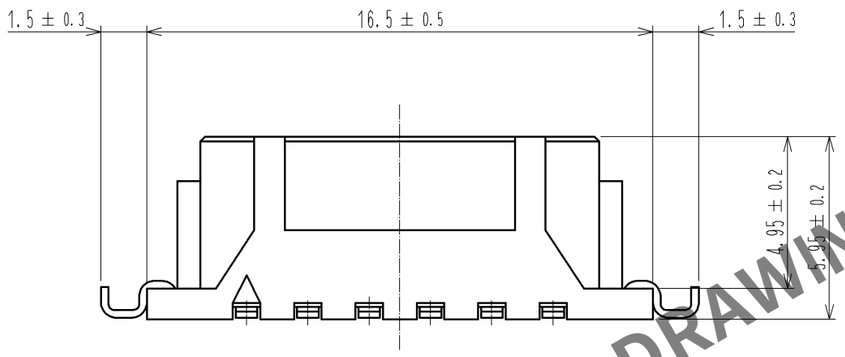

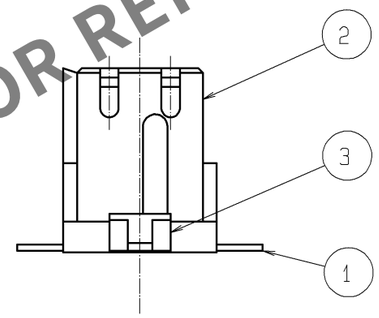

HRS DRAWING FOR REFERENCE

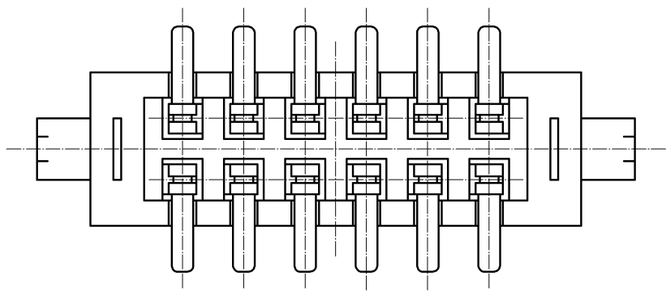

NOTES 1 : IF THERE IS PATTERN ON ▩ PART, THERE IS A POSSIBILITY THAT IT WILL MAKE CONTACT WITH THE LEADS.
2 : LEAD CO-PLANARITY INCLUDE REINFORCED METAL FITTINGS SHALL BE 0.1mm MAX.

NO.	MATERIAL	FINISH , REMARKS	NO.	MATERIAL	FINISH , REMARKS
3	BRASS	TIN PLATED 1μm min.	6	POLYAMIDE	BROWN(HEAT-RESISTANCE TAPE)
2	POLYAMIDE	UL94V-0, NATURAL(BEIGE)	5	POLYESTER	CLEAR(COVER TAPE)
1	PHOSPHOR BRONZE	TIN PLATED 2μm min.	4	PS	CLEAR(EMBOSSED CARRIER TAPE)

UNITS	SCALE	COUNT	DESCRIPTION OF REVISIONS	DESIGNED	CHECKED	DATE
mm	5 : 1	△				

HRS HIROSE ELECTRIC CO., LTD.

APPROVED	: KI. AKIYAMA	11. 02. 21	DRAWING NO.	EDC3-302590-01
CHECED	: HK. UMEHARA	11. 02. 18	PART NO.	DF11CZ-12DS-2V(22)
DESIGNED	: TH. YOSHIZAWA	11. 02. 18	CODE NO.	CL543-2067-1-22 △ 1/2
DRAWN	: MI. SAKIMURA	11. 02. 18		

FORM HC0011-5-7

May.1.2024 Copyright 2024 HIROSE ELECTRIC CO., LTD. All Rights Reserved.
In case of consideration for using Automotive equipment / device which demand high reliability, kindly contact our sales window correspondents.

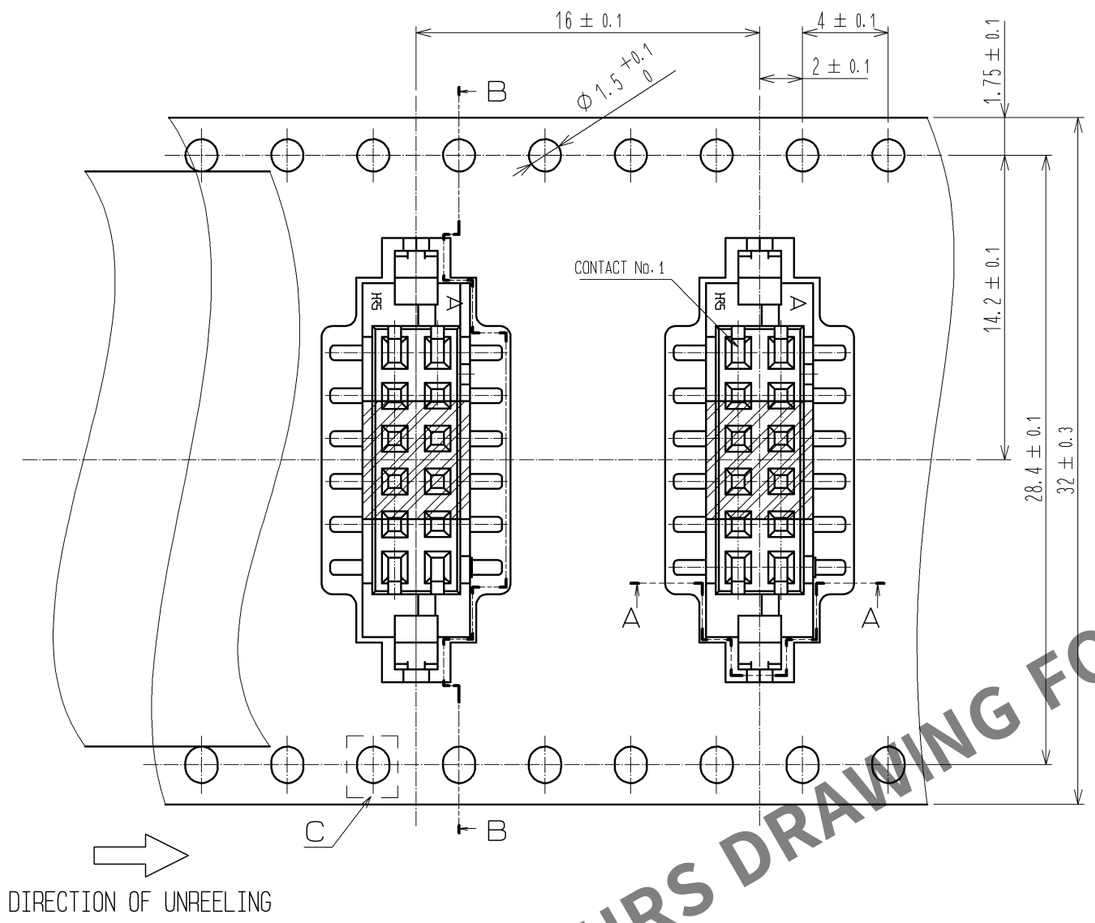

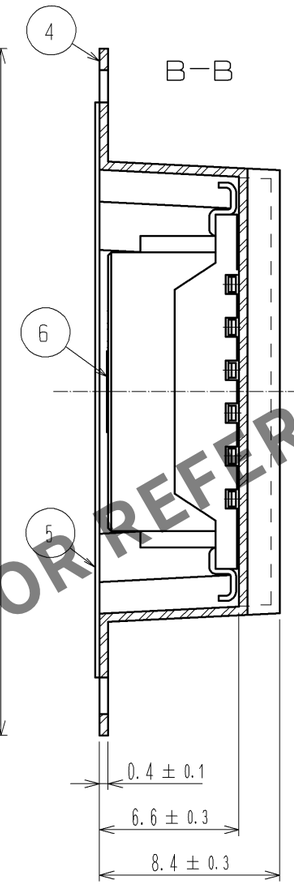

POSITION IN WHICH
HEAT-RESISTANCE TAPE IS PUT

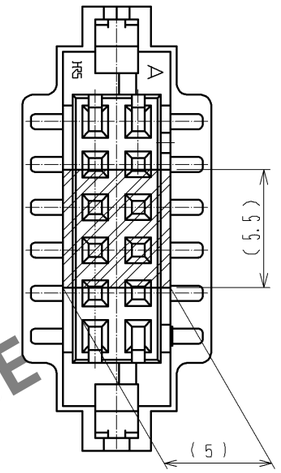

C(10:1)

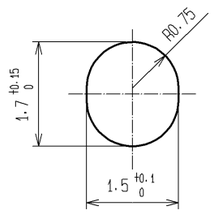

A−A

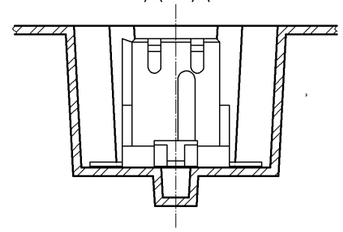

STYLE AND DIMENSION OF REEL

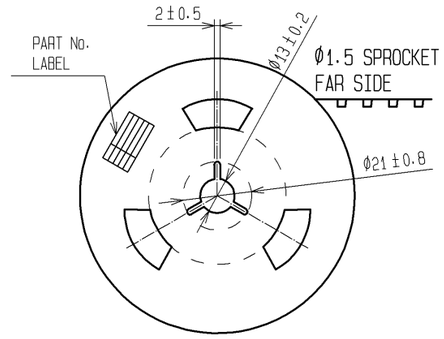

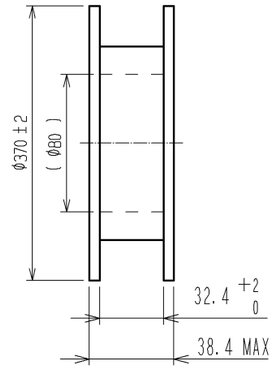

SUPPLIER
QUANTITY
PART No.
CODE No.
DATE OF MANUFACTURED

5 DETAIL OF PART No. LABEL

生産月日	年　月　日
図番	CL543-2067-1-22
品名	DF11CZ-12DS-2V(22)
納入数量	500KO
納入者	ヒロセ電機株式会社

NOTES 3 :1 REEL:500 CONNECTORS.
4 :AT THE BIGINNING OF THE REEL, 15 COMPONENTS SHALL BE EMPTY.
AT THE END OF THE REEL, 10 COMPONENTS SHALL BE EMPTY.
5 :DETAIL OF PART No. LABEL IS WRITTEN IN JAPANESE.
6 :THE REEL IS POLYETHYLENE PACKAGED WITH AN DRY AGENT INSIDE FOR MOISTURE-PROOF PACKAGING.
7 :FOR THE STORAGE OF 168 HOURS OR MORE AFTER OPENING THE PACKAGE, KEEP THE PRODUCTS UNDER MOISTURE PROOF CONDITIONS.
8 :EXCEPT ON THE MATING SURFACE, COMPONENT INFLATION DOES NOT AFFECT THE PRODUCTS PERFORMANCE.

HRS DRAWING FOR REFERENCE

DRAWING NO.	EDC3-302590-01
PART NO.	DF11CZ-12DS-2V(22)
CODE NO.	CL543-2067-1-22

△ 2/2