Apr.1.2024 Copyright 2024 HIROSE ELECTRIC CO., LTD. All Rights Reserved.
In case of consideration for using Automotive equipment / device which demand high reliability, kindly contact our sales window

	COUNT	DESCRIPTION OF REVISIONS	BY	CHKD	DATE		COUNT	DESCRIPTION OF REVISIONS	BY	CHKD	DATE
△					. .	△					. .
△					. .	△					. .
△					. .	△					. .

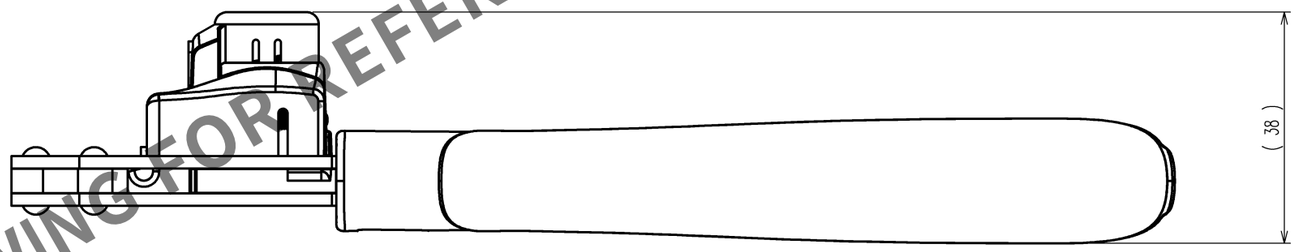

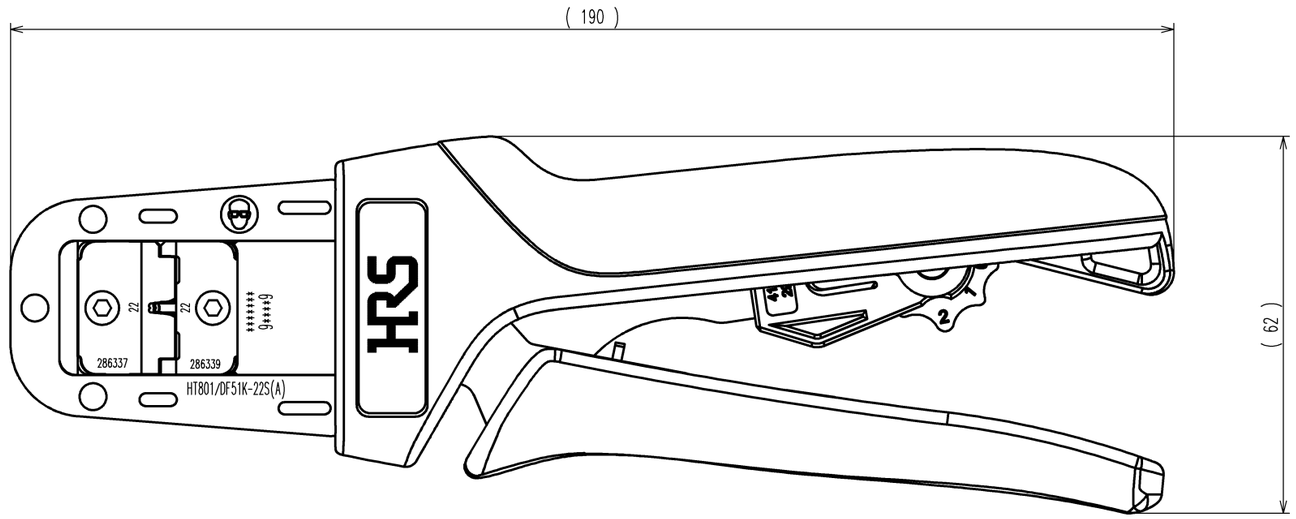

HRS DRAWING FOR REFERENCE

Notes 1. Contact of DF51K-22SC(800)(CL0480-0582-0) and DF51K-22SCA(800)(CL0480-0613-0) is assembled for this tool.

2			4		
1			3		
NO.	MATERIAL	FINISH, REMARKS	NO.	MATERIAL	FINISH, REMARKS

CODE NO.(OLD)	DRAWN	DESIGNED	CHECKED	APPROVED	RELEASED
CL	M.HOSHINO 19.6.25	H.TOKUTA 19.6.25	H.YANAGISAWA 19.6.25	T.ARAKAWA 19.6.25	. .

SCALE 1 : 1	DRAWING NO. EDC-285411-00-00	PART NO. HT801/DF51K-22S(A)
UNITS mm	HRS HIROSE ELECTRIC CO., LTD	CODE NO. CL550-0442-0 1/1

TO
PE