Mar.1.2024 Copyright 2024 HIROSE ELECTRIC CO., LTD. All Rights Reserved.
In case of consideration for using Automotive equipment / device which demand high reliability, kindly contact our sales window correspondents.

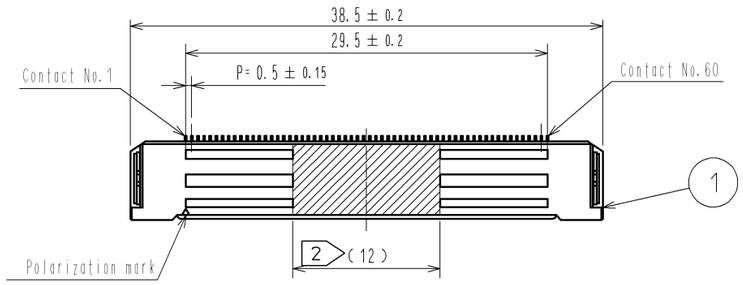

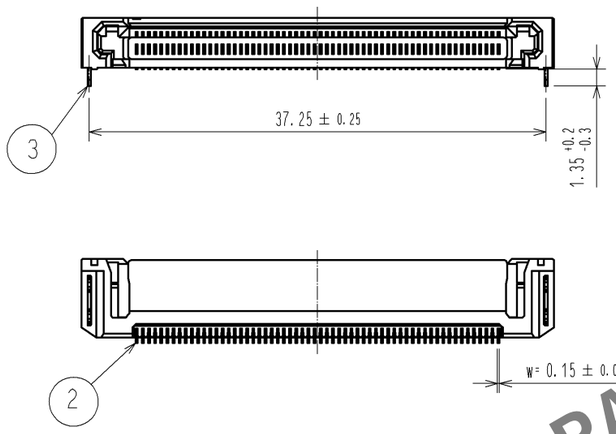

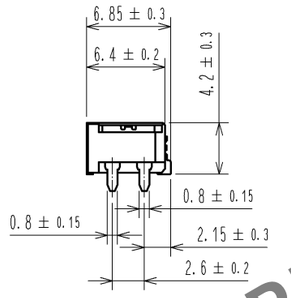

CROSS SECTION OF MATING(5:1)

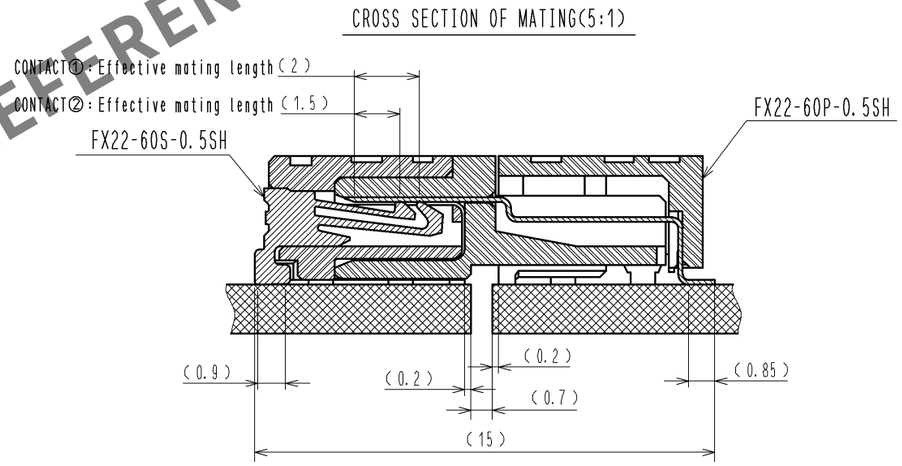

HRS DRAWING FOR REFERENCE

RECOMMENDED LAND PATTERN DIMENSION OF PCB
(PCB THICKNESS: t=1.6mm METAL MASK THICKNESS: t=0.12mm)

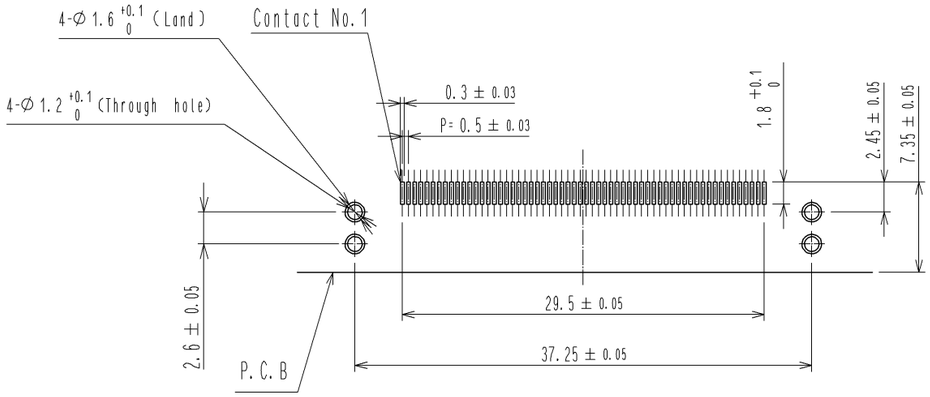

NOTE 1 Lead CO-Planarity is 0.1mm MAX.
2 It shows the vacuum pickup area.
3 Packing for product applies embossed carrier tape packing.(700pcs/RL)
4 Blemish and hit mark can be occured through out the manufacturing process which doesn't affect quality level.
5 The dimensions in parentheses are for references.

NO.	MATERIAL	FINISH , REMARKS	NO.	MATERIAL	FINISH , REMARKS
3	COPPER ALLOY	CONTACT AREA:GOLD 0.1μm LEAD AREA:GOLD 0.03μm UNDER PLATING:NICKEL 1.3μm	5	POLYESTER	(EMBOSSED COVER TAPE)
			4	POLYSTYRENE	(EMBOSSED CARRIER TAPE)
1	LCP	BLACK UL94V-0	3	BRASS	TIN-PLATING 3μm UNDER PLATING:NICKEL 1μm

UNITS	SCALE	COUNT	DESCRIPTION OF REVISIONS	DESIGNED	CHECKED	DATE
mm	2 : 1	△				

HRS HIROSE ELECTRIC CO., LTD.

APPROVED	HS. OKAWA	14.07.07	DRAWING NO.	EDC3-352602-00
CHECKED	KN. SHIBUYA	14.07.07	PART NO.	FX22-60S-0.5SH
DESIGNED	AH. EDASHIGE	14.07.07	CODE NO.	CL572-3102-1-00
DRAWN	AH. EDASHIGE	14.07.07		△ 1/2

Mar.1.2024 Copyright 2024 HIROSE ELECTRIC CO., LTD. All Rights Reserved.
In case of consideration for using Automotive equipment / device which demand high reliability, kindly contact our sales window correspondents.

3 DRAWING FOR PACKING

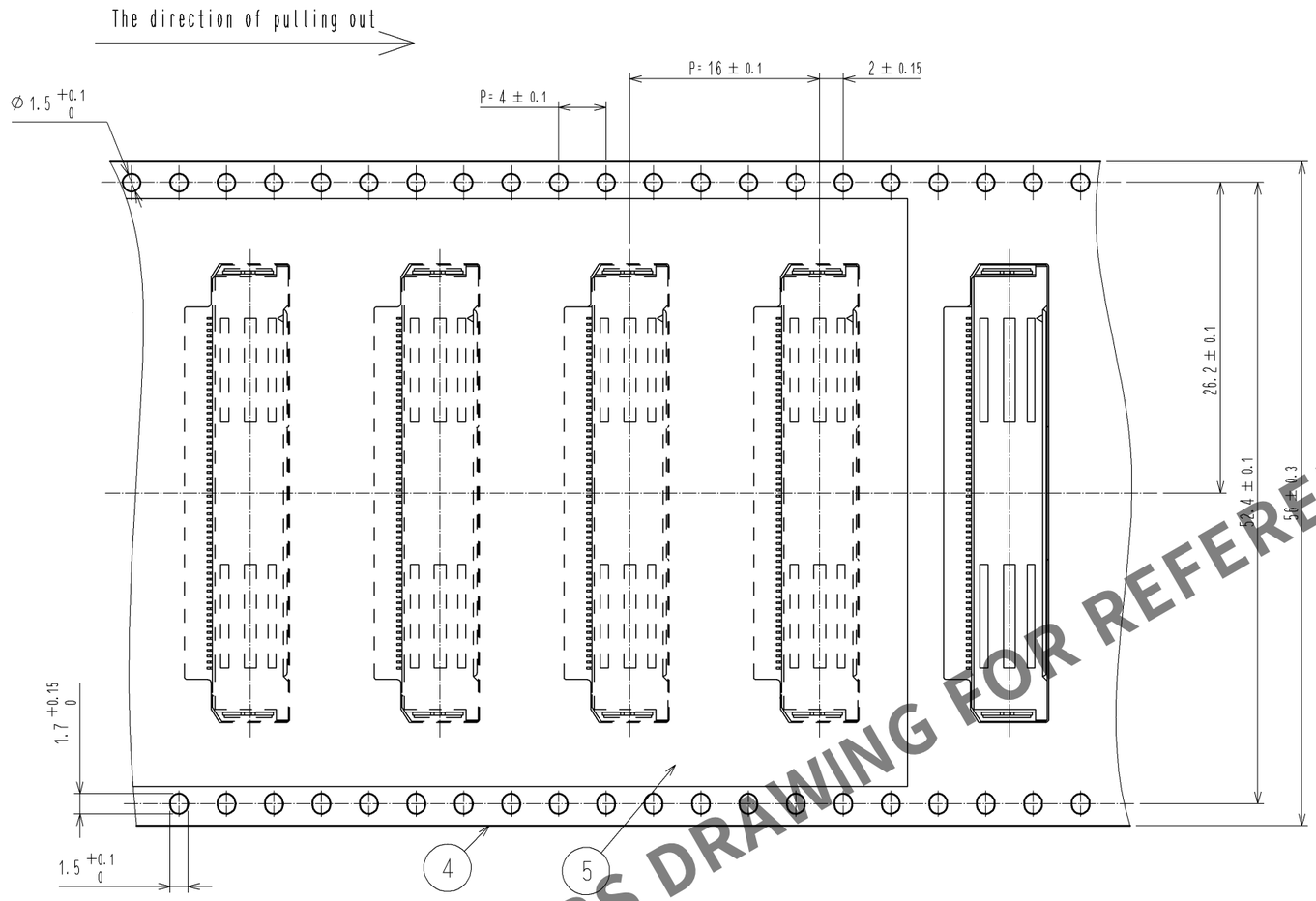

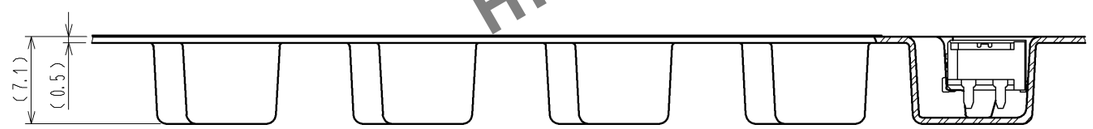

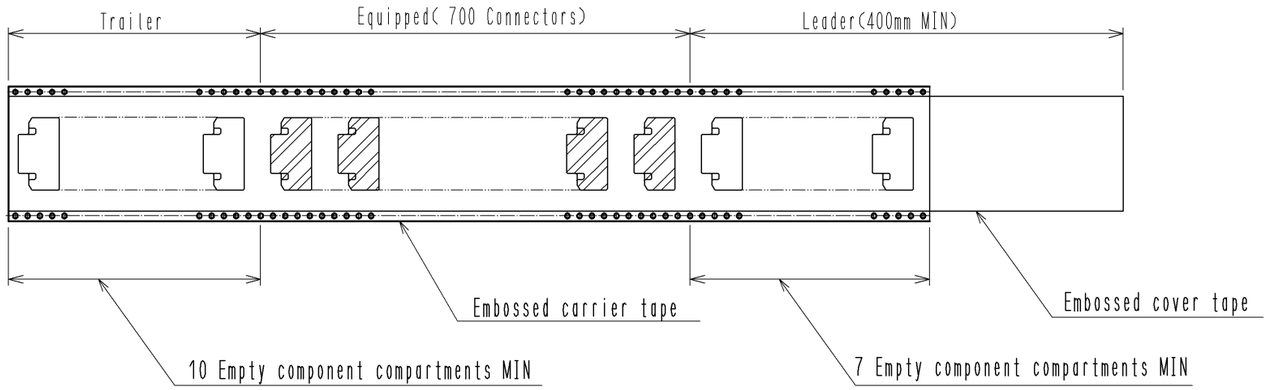

REELING DIMENSION (No scale)

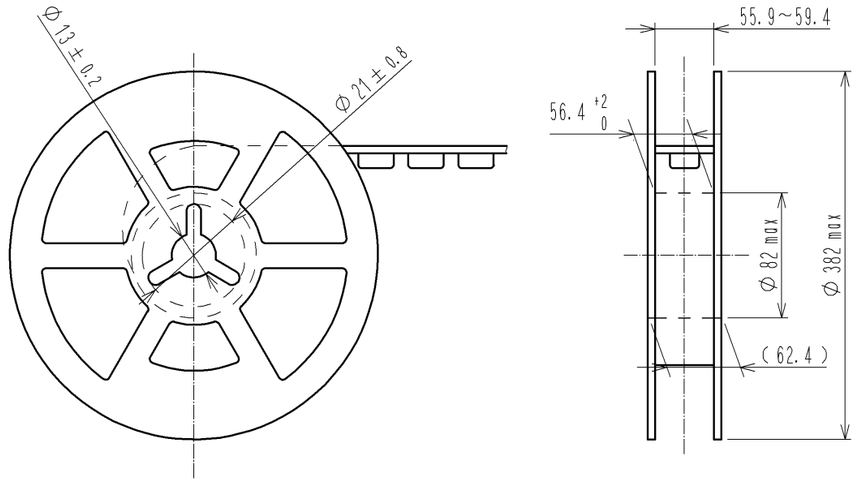

HRS DRAWING FOR REFERENCE

HRS	DRAWING NO.	EDC3-352602-00
	PART NO.	FX22-60S-0.5SH
	CODE NO.	CL572-3102-1-00 △ 2/2