May.1.2024 Copyright 2024 HIROSE ELECTRIC CO., LTD. All Rights Reserved.
In case of consideration for using Automotive equipment / device which demand high reliability, kindly contact our sales window correspondents.

	COUNT	DESCRIPTION OF REVISIONS	BY	CHKD	DATE		COUNT	DESCRIPTION OF REVISIONS	BY	CHKD	DATE
△					. .	△					. .
△					. .	△					. .
△					. .	△					. .

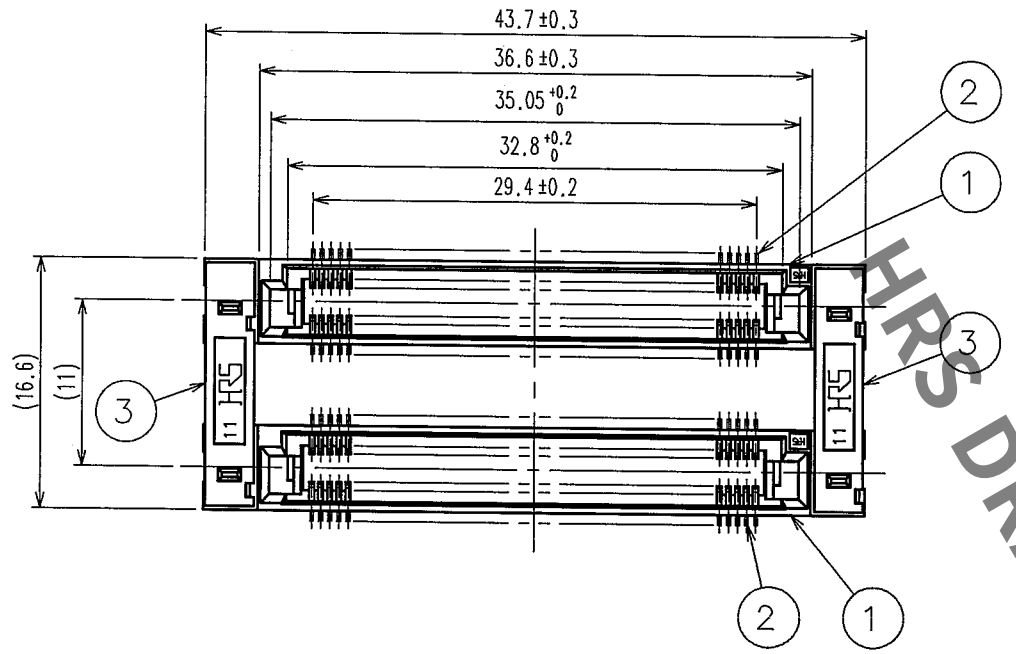

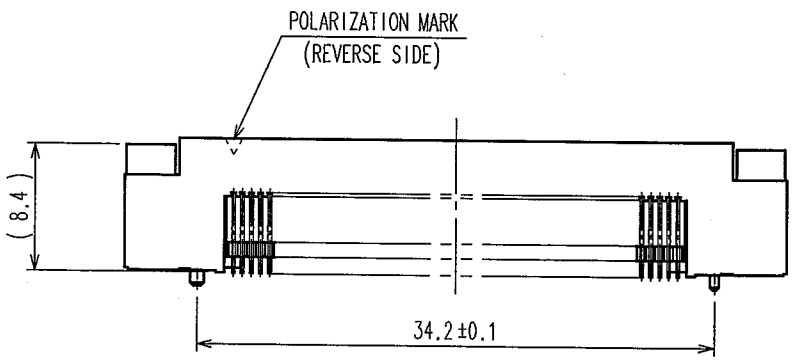

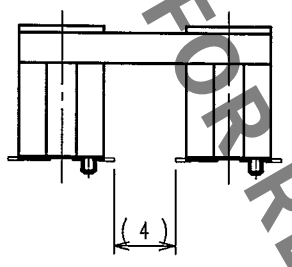

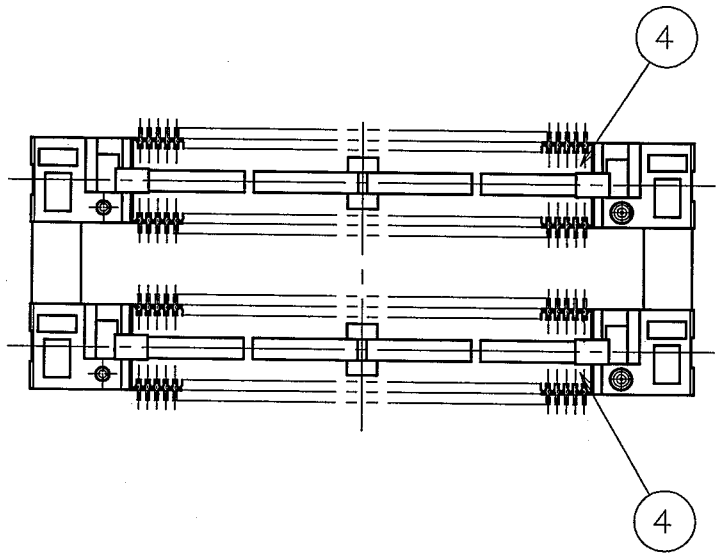

RECOMMENDED LAND PATTERN DIMENSION
OF PCB (MOUNTING SIDE)

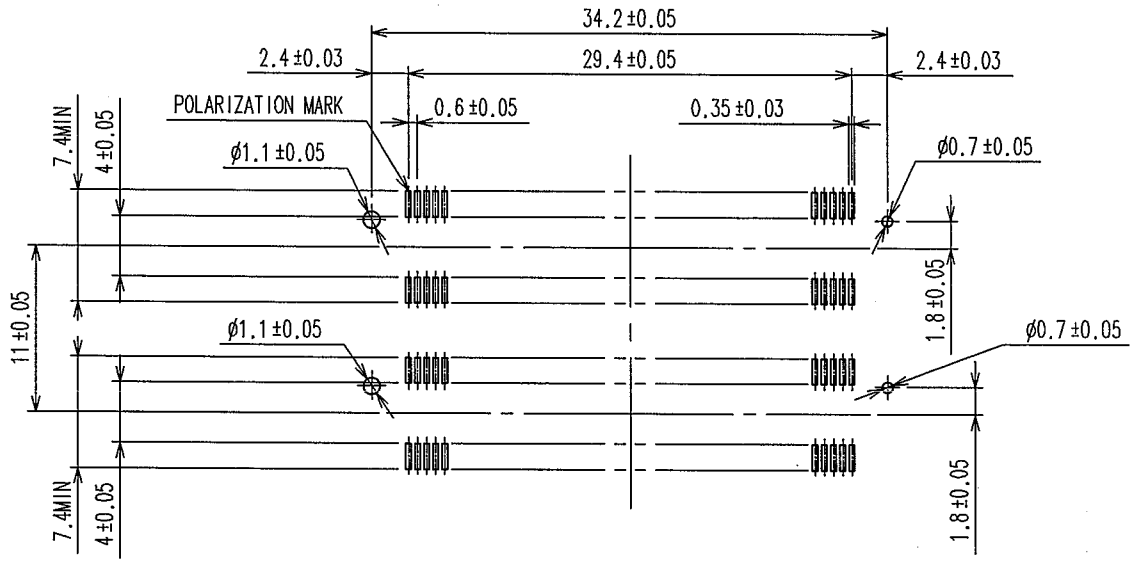

NOTES
1 LEAD CO-PLANARITY SHALL BE 0.1mm MAX.
2 AFTER MOUNTING BOARD, REF.NO.3 SHALL BE REMOVED.
3 FOR MODIFICATION, ETC., PREVENTIVE HOLE FOR SINK MARK MAY BE ADDED DEPENDS ON CIRCUMSTANCES.
4 THE DIMENSIONS IN PARENTHESES ARE FOR REFERENCE.

HRS DRAWING FOR REFERENCE

NO.	MATERIAL	FINISH, REMARKS	NO.	MATERIAL	FINISH, REMARKS
1,3,4	POLYPHENYLENE SULFIDE	LIGHT BROWN (UL94V-0)	2	PHOSPHOR BRONZE	CONTACT AREA:GOLD 0.1μm min LEAD AREA:TIN-PLATING 1μm min UNDER PLATING:NICKEL 1μm min

CODE NO.(OLD)	DRAWN	DESIGNED	CHECKED	APPROVED	RELEASED
CL	H. Doi '04.12.28	H. Doi '04.12.28	H. Okawa '04.12.28	H. Okawa '04.12.28	. .

SCALE 2 : 1	DRAWING NO. EDC3-150973-25	PART NO. FX8C-100/100S11-SV5J(71)
UNITS mm	HRS HIROSE ELECTRIC CO., LTD	CODE NO. CL578-0925-5-71 1/2

TO
PCK

May.1.2024 Copyright 2024 HIROSE ELECTRIC CO., LTD. All Rights Reserved.
In case of consideration for using Automotive equipment / device which demand high reliability, kindly contact our sales window correspondents.

COUNT	DESCRIPTION OF REVISIONS	BY	CHKD	DATE	COUNT	DESCRIPTION OF REVISIONS	BY	CHKD	DATE
△				. .	△				. .
△				. .	△				. .
△				. .	△				. .

DETAIL AFTER REMOVING JOINT

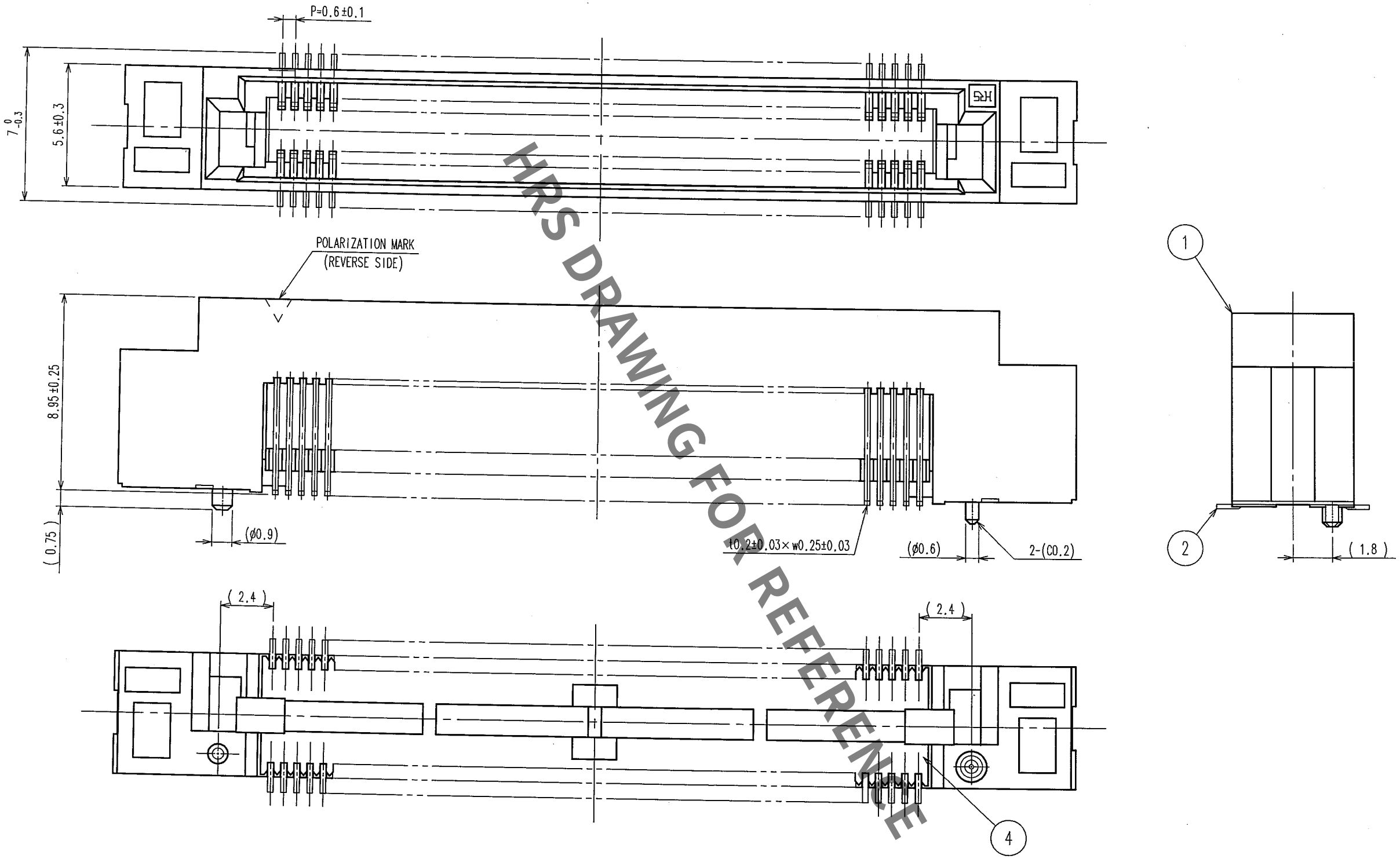

HRS DRAWING FOR REFERENCE

NOTE THE DIMENSIONS IN PARENTHESES ARE FOR REFERENCE.

TO
PCK

NO.	MATERIAL	FINISH, REMARKS	NO.	MATERIAL	FINISH, REMARKS

CODE NO.(OLD)	DRAWN	DESIGNED	CHECKED	APPROVED	RELEASED
CL	H. Doi '04.12.28	H. Doi '04.12.28	H Okawa '04.12.28	H Okawa '04.12.28	. .

SCALE	DRAWING NO.	PART NO.
5 : 1	EDC3-150973-25	FX8C-100/100S11-SV5J(71)
UNITS mm	HRS HIROSE ELECTRIC CO., LTD	CODE NO. CL578-0925-5-71

2/