Apr.1.2024 Copyright 2024 HIROSE ELECTRIC CO., LTD. All Rights Reserved.
In case of consideration for using Automotive equipment / device which demand high reliability, kindly contact our sales window correspondents.

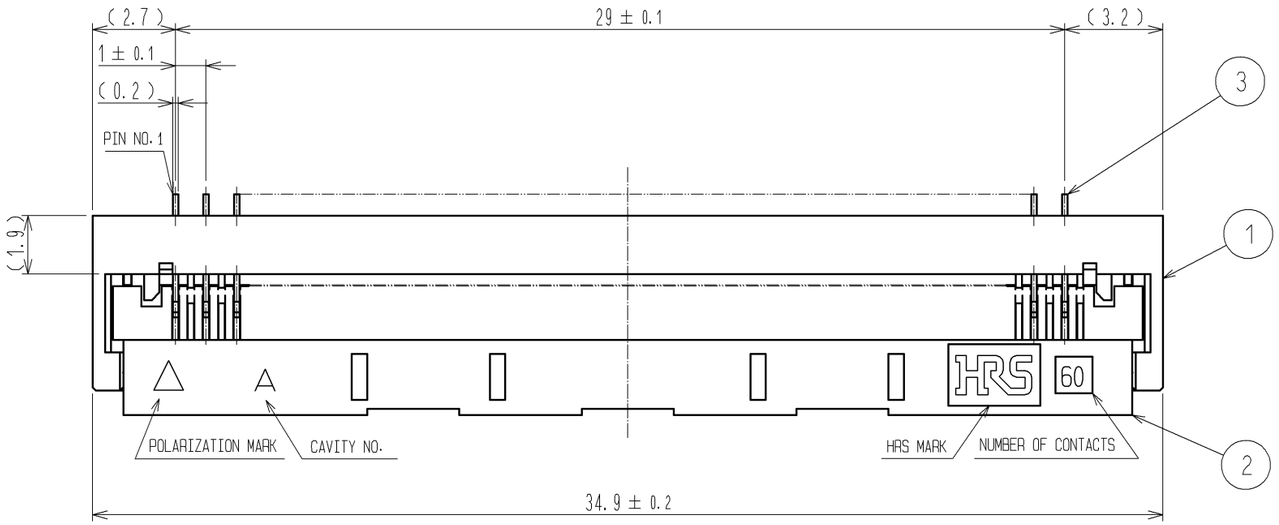

RECOMMENDED FPC (FREE)

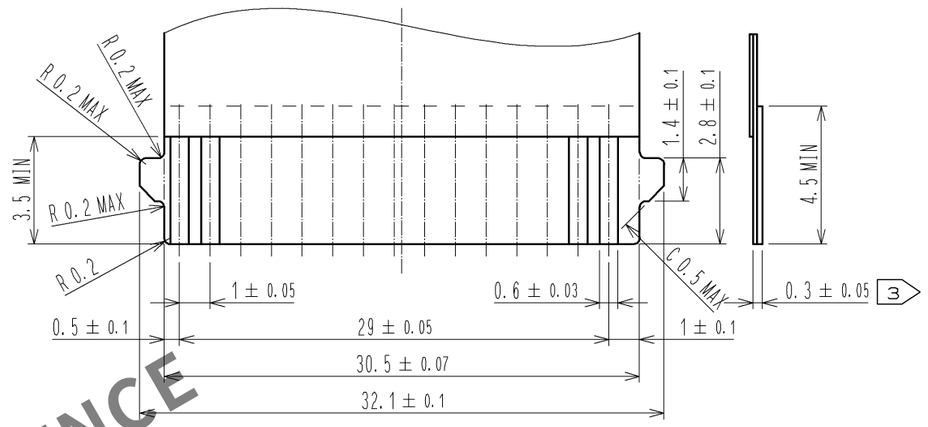

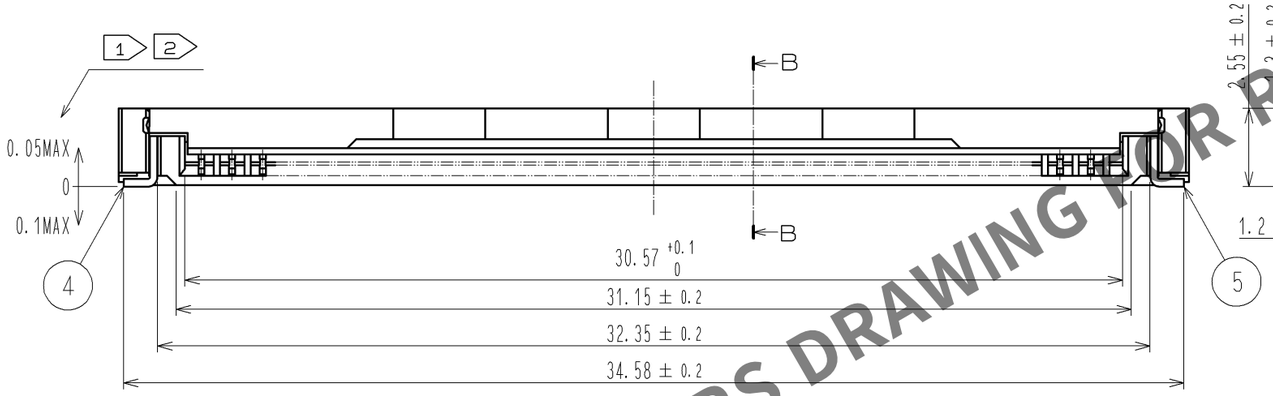

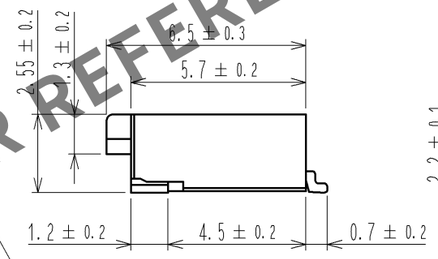

RECOMMENDED LAND PATTERN , METAL MASK(FREE)

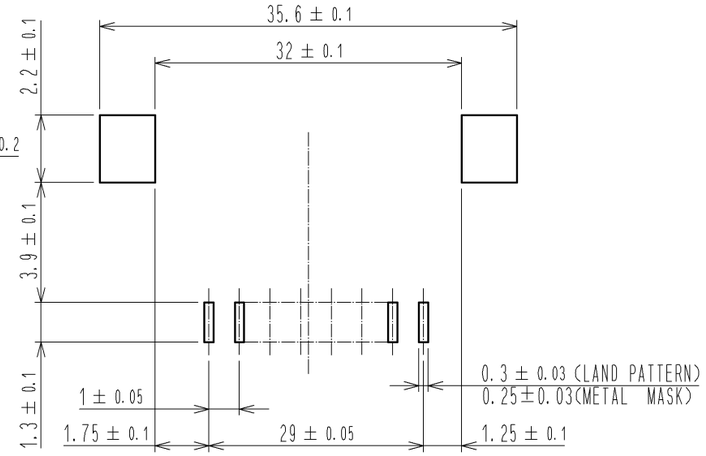

B-B(10:1)

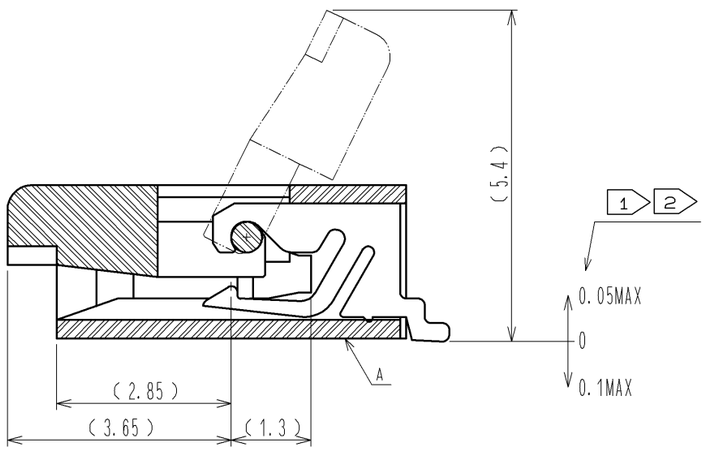

NOTE
1. REFERENCE IS A.
2. LEAD CO-PLANARITY SHALL BE 0.1 MAX.
3. THICKNESS OF SUPPORTING TAPE SHALL BE 0.188(7.5mil) MIN.

RECOMMENDED METAL MASK THICKNESS:t=0.15

NO.	MATERIAL	FINISH , REMARKS	NO.	MATERIAL	FINISH , REMARKS
5	BRASS	TIN PLATING 1μmMIN OVER NICKEL 1μmMIN			
4	BRASS	TIN PLATING 1μmMIN OVER NICKEL 1μmMIN	9	(CONNECTOR)	
3	PHOSPHOR BRONZE	GOLD PLATING 0.05μmMIN OVER NICKEL 1μmMIN	8	POLYSTYRENE	
2	LCP	(BLACK) UL94V-0	7	POLYESTER	
1	LCP	(GRAY) UL94V-0	6	POLYSTYRENE	

UNITS mm	SCALE 5 : 1	COUNT	DESCRIPTION OF REVISIONS	DESIGNED	CHECKED	DATE

HIROSE ELECTRIC CO., LTD.

APPROVED	: RI. TAKAYASU	08. 08. 26	DRAWING NO.	EDC3-155256-04
CHECED	: HS. SAKAMOTO	08. 08. 26	PART NO.	FH28-60(30)SB-1SH(05)
DESIGNED	: RT. IKEDA	08. 08. 22	CODE NO.	CL586-1818-5-05
DRAWN	: RT. IKEDA	08. 08. 22		1/2

HRS DRAWING FOR REFERENCE

Apr.1.2024 Copyright 2024 HIROSE ELECTRIC CO., LTD. All Rights Reserved.
In case of consideration for using Automotive equipment / device which demand high reliability, kindly contact our sales window correspondents.

EMBOSSED CARRIER TAPE DIMENSION(2:1)

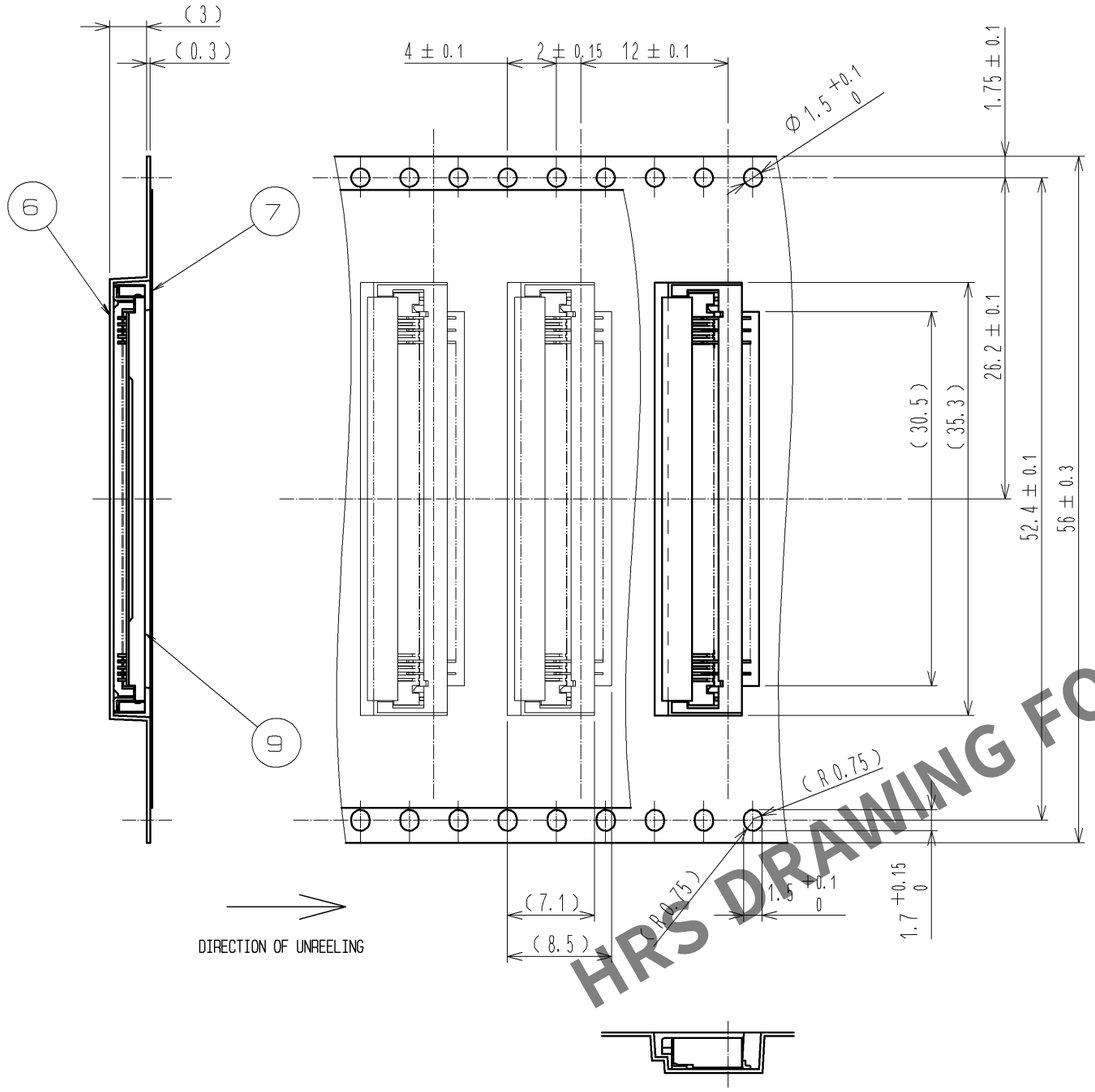

REEL DIMENSION(FREE)

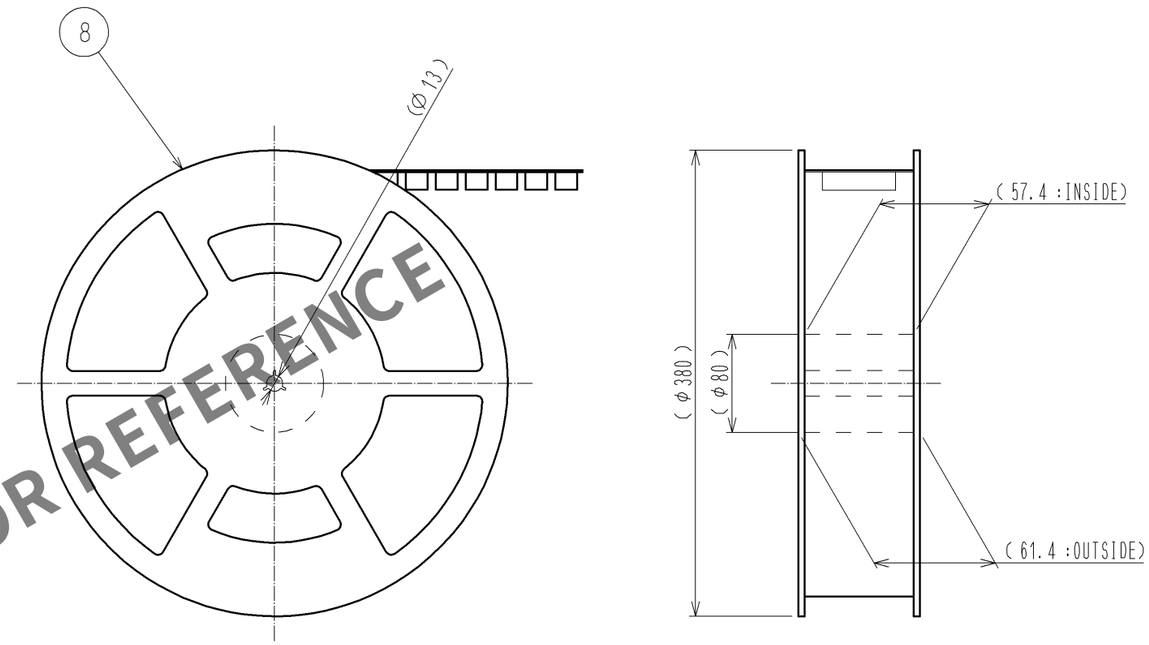

HRS DRAWING FOR REFERENCE

NOTE 4 THE DIMENSIONS IN PARENTHESES ARE FOR REFERENCE.
5 PER REEL : 2000 CONNECTORS.
6 REFER TO JIS C 0806 (PACKAGING OF COMPONENTS FOR AUTOMATIC HANDLING).

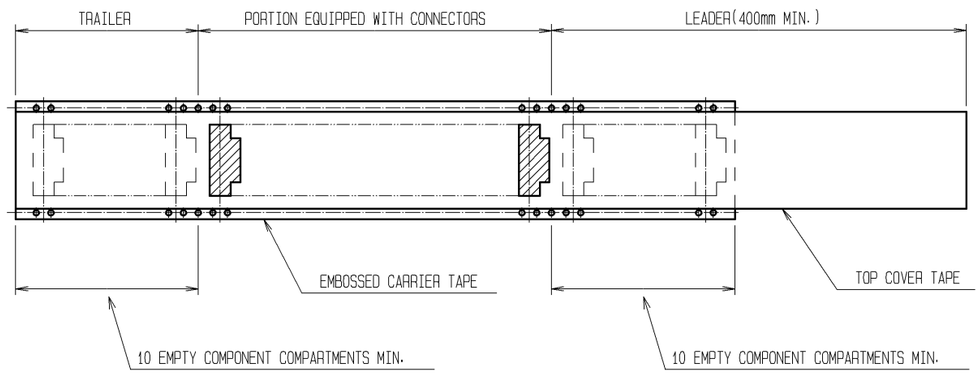

DRAWING FOR PACKING

HRS	DRAWING NO.	EDC3-155256-04
	PART NO.	FH28-60(30)SB-1SH(05)
	CODE NO.	CL586-1818-5-05 △ 2/2