Mar.1.2024 Copyright 2024 HIROSE ELECTRIC CO., LTD. All Rights Reserved.
In case of consideration for using Automotive equipment / device which demand high reliability, kindly contact our sales window correspondents.

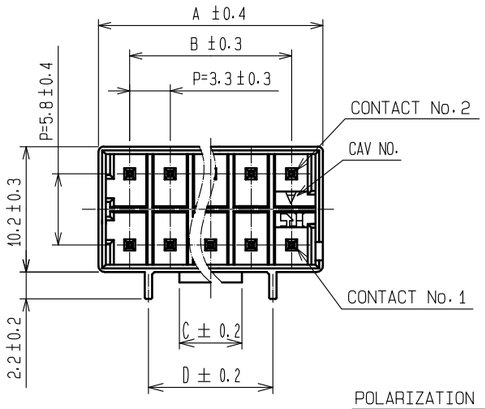

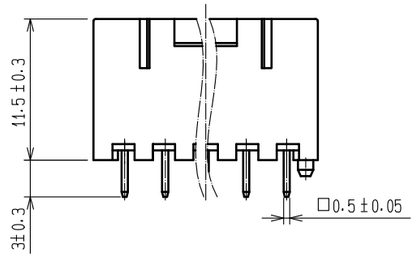

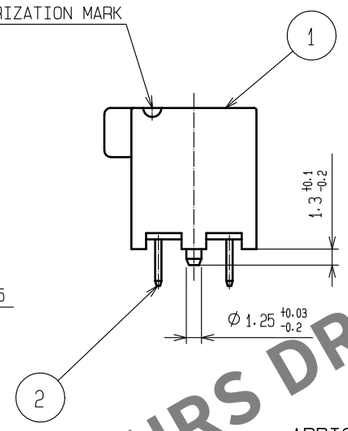

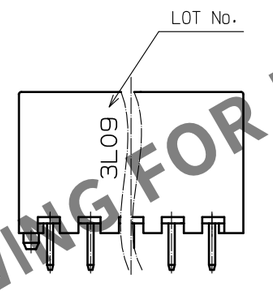

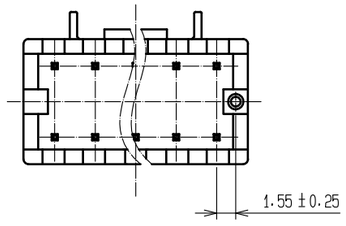

APRICATION DIAGRAM

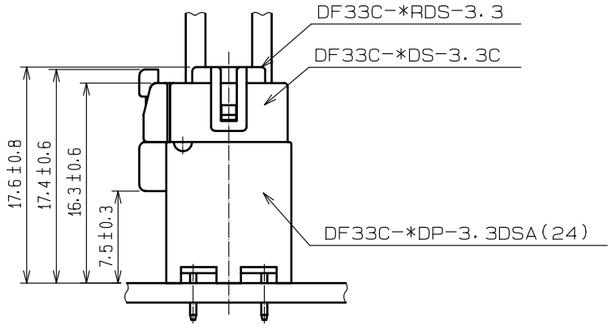

RECOMMENDED PATTERN(5:1)
(RECOMMENDED BOARD THICKNESS t=1.6mm)

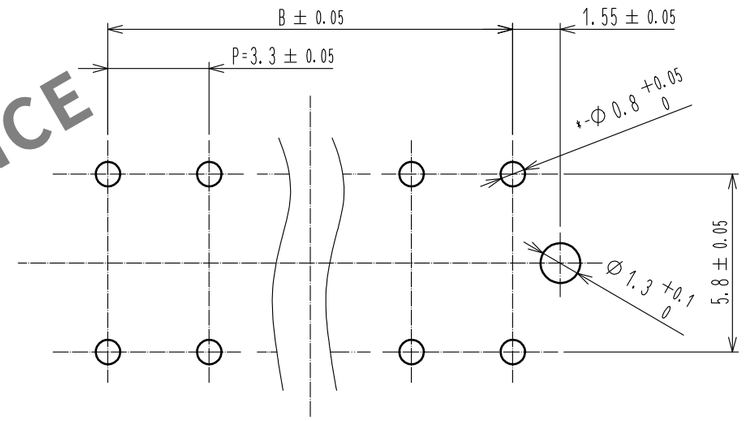

PART No.	CODE No.	THE NUMBER OF CONTACT	A	B	C	D
DF33C- 4DP-3.3DSA(24)	CL676-1113-0-24	4	8.4	—	2.5	6.8
DF33C- 6DP-3.3DSA(24)	CL676-1114-3-24	6	11.7	6.6	2.5	6.8
DF33C- 8DP-3.3DSA(24)	CL676-1115-6-24	8	15.0	9.9	5.1	10.15
DF33C-10DP-3.3DSA(24)	CL676-1116-9-24	10	18.3	13.2	5.1	10.15
DF33C-12DP-3.3DSA(24)	CL676-1117-1-24	12	21.6	16.5	5.1	10.15

NOTES 1 :IMMERSION DEPTH INTO POTTIING SOLUTION:6.5mm

HRS DRAWING FOR REFERENCE

NO.	MATERIAL	FINISH , REMARKS
1	△1 PBT	△1 WHITE UL94V-0

NO.	MATERIAL	FINISH , REMARKS
3	HIPS	TRAY
2	BRASS	SURFACE:TIN PLATED 1μm min UNDER PLATING:NICKEL PLATED 0.5μm min

UNITS	SCALE		COUNT	DESCRIPTION OF REVISIONS	DESIGNED	CHECKED	DATE
mm	2 : 1	△1	2	DIS-H-00012938	SS. YAMASAKI	SZ. ONO	20220323

HRS HIROSE ELECTRIC CO., LTD.

APPROVED	:KI. AKIYAMA	20131217	DRAWING NO.	EDC3-354790-01
CHECKED	:HK. UMEHARA	20131217	PART NO.	DF33C-*DP-3.3DSA(24)
DESIGNED	:HT. SATO	20131217	CODE NO.	CL676- △1 1/2
DRAWN	:MI. SAKIMURA	20131217		

FORM HC0011-5-7

Mar.1.2024 Copyright 2024 HIROSE ELECTRIC CO., LTD. All Rights Reserved.
In case of consideration for using Automotive equipment / device which demand high reliability, kindly contact our sales window correspondents.

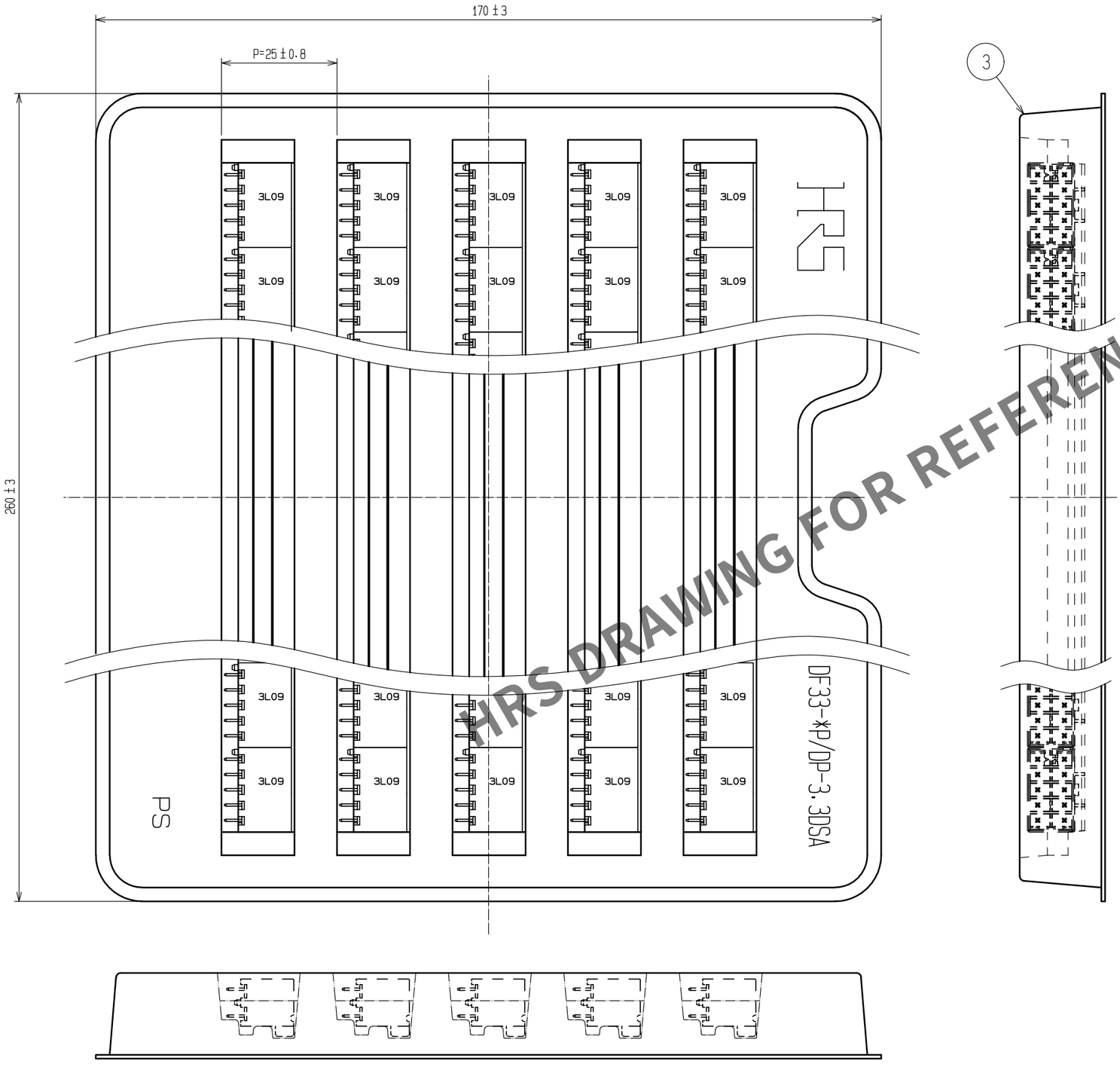

HRS DRAWING FOR REFERENCE

PART No.	CODE No.	THE NUMBER OF TRAY PACKING
DF33C- 4DP-3.3DSA(24)	CL676-1113-0-24	135
DF33C- 6DP-3.3DSA(24)	CL676-1114-3-24	95
DF33C- 8DP-3.3DSA(24)	CL676-1115-6-24	75
DF33C-10DP-3.3DSA(24)	CL676-1116-9-24	60
DF33C-12DP-3.3DSA(24)	CL676-1117-1-24	50

NOTES 2 :MINIMUM UNIT OF PURCHASE SHALL BE THE QUANTITY OF CONNECTORS IN TRAY.

HRS	DRAWING NO.	EDC3-354790-01
	PART NO.	DF33C-*DP-3.3DSA(24)
	CODE NO.	CL676- △1 2/2