Apr.1.2024 Copyright 2024 HIROSE ELECTRIC CO., LTD. All Rights Reserved.
In case of consideration for using Automotive equipment / device which demand high reliability, kindly contact our sales window correspondents.

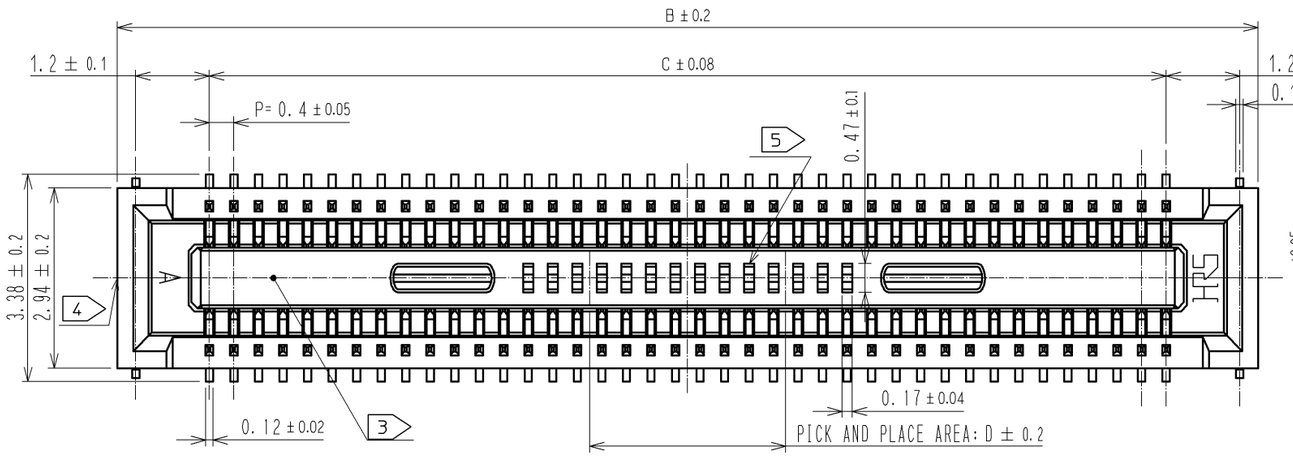

RECOMMENDED PATTERN

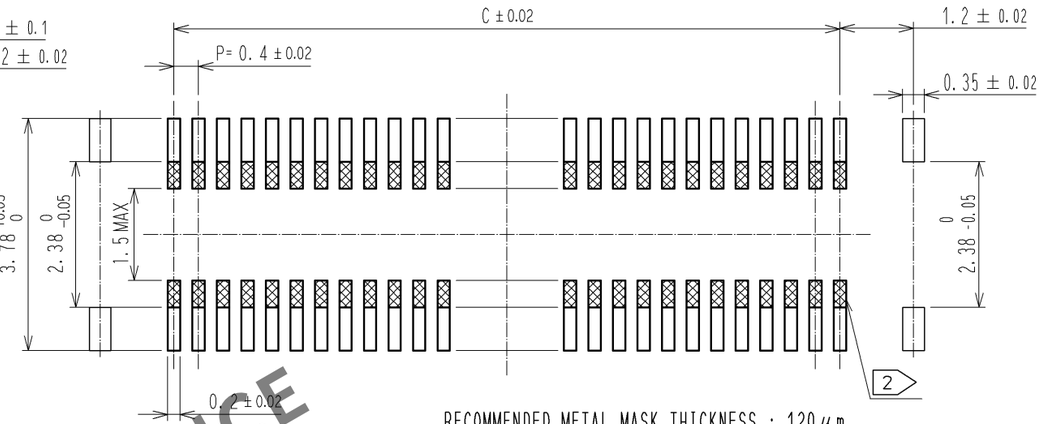

RECOMMENDED METAL MASK THICKNESS : 120μm
RECOMMENDED METAL MASK OPENING TATIO : 80% FOR READ PAD

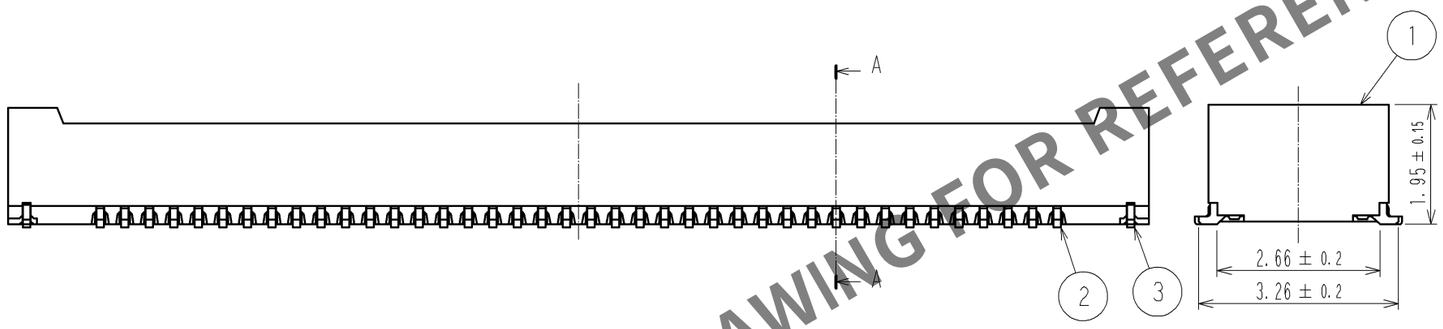

PART NO.	CODE NO.	B	C	D
DF40B(2.0)-10DS-0.4V(51)	—	4.6	1.6	1.0
DF40B(2.0)-12DS-0.4V(51)	CL684-4150-8-51	5.0	2.0	1.0
DF40B(2.0)-20DS-0.4V(51)	—	6.6	3.6	1.0
DF40B(2.0)-24DS-0.4V(51)	—	7.4	4.4	1.0
DF40B(2.0)-30DS-0.4V(51)	—	8.6	5.6	1.5
DF40B(2.0)-40DS-0.4V(51)	—	10.6	7.6	3.2
DF40B(2.0)-50DS-0.4V(51)	—	12.6	9.6	3.2
DF40B(2.0)-60DS-0.4V(51)	—	14.6	11.6	3.2
DF40B(2.0)-70DS-0.4V(51)	—	16.6	13.6	3.2
DF40B(2.0)-80DS-0.4V(51)	CL684-4128-9-51	18.6	15.6	3.2
DF40B(2.0)-90DS-0.4V(51)	—	20.6	17.6	3.2
DF40B(2.0)-100DS-0.4V(51)	—	22.6	19.6	3.2

HRS DRAWING FOR REFERENCE

A-A(20:1)

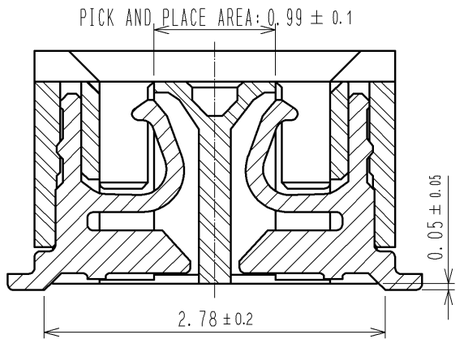

ENGAGEMENT FIGURE(20:1)

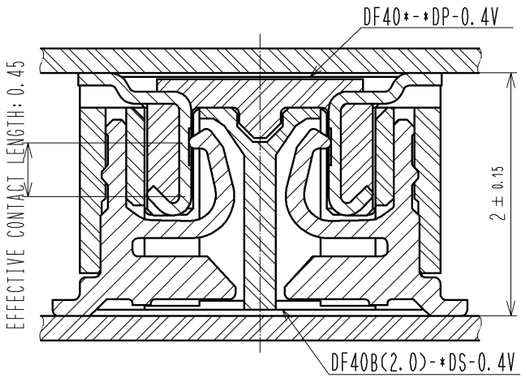

NOTES) 1. ALL LEADS CO-PLANARITY SHALL BE 0.1 MAX
2 IS NO PATTERN AREA OTHER THAN THE SAME CIRCUIT.
3 GATE POSITION OF 60 TO 100 POSITIONS IS POSITIONED IN APPROXIMAL AREA SHOWN.
4 GATE POSITION OF 10 TO 50 POSITIONS IS POSITIONED IN APPROXIMAL AREA SHOWN.
A PART OF THE WALL COULD BE NOTCHED FOR SETTING GATE.
5 60 TO 100 POSITIONS HAVE CONCAVE PORTION.

NO.	MATERIAL	FINISH . REMARKS	NO.	MATERIAL	FINISH . REMARKS
2	PHOSPHOR BRONZE	CONTACT AREA:GOLD 0.05μm MIN	6	PS	BLACK
		SMT LEAD:GOLD 0.05μm MIN	5	POLYESTER	CLEAR, COVER TAPE
		UNDERPLATING:NICKEL 1μm MIN	4	PS	CLEAR, EMBOSSED CARRIER TAPE
1	LCP	BLACK, UL94V-0	3	PHOSPHOR BRONZE	GOLD

UNITS	SCALE	△の数	訂 正 記 事	設 計	検 図	年月日
mm	10 : 1	△				

HRS HIROSE ELECTRIC CO., LTD.

承 認	: TS. MIYAZAKI	10.12.16
検 図	: AR. TAKAHASHI	10.12.16
設 計	: TK. SUZUKI	10.12.16
製 図	: TK. SUZUKI	10.12.16

図番 : EDC3-332419-01
製品名 : DF40B(2.0)-*DS-0.4V(51)
製品コード CL684
△ 1/2

FORM HC0011-5-3

Apr.1.2024 Copyright 2024 HIROSE ELECTRIC CO., LTD. All Rights Reserved.
In case of consideration for using Automotive equipment / device which demand high reliability, kindly contact our sales window correspondents.

SCALE (FREE)

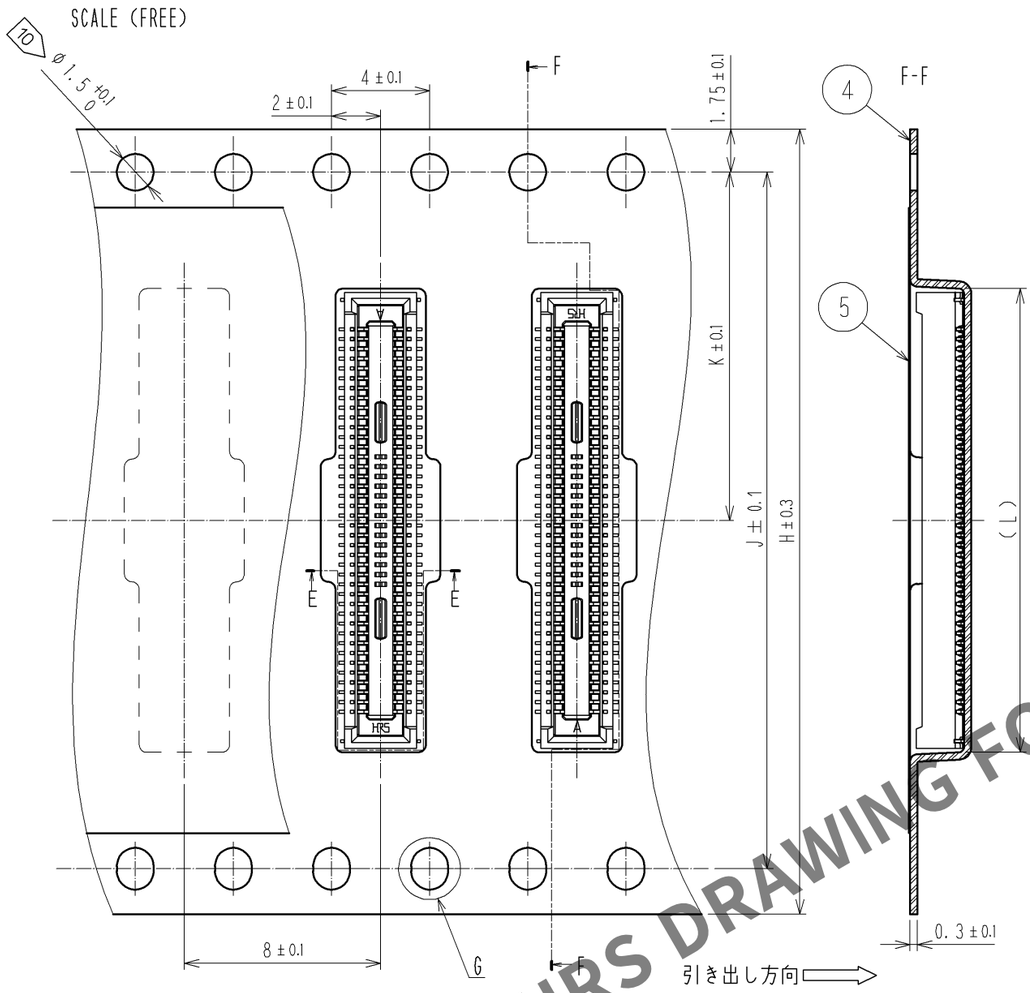

G(10:1)

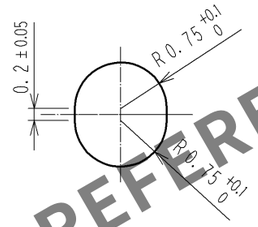

STYLE AND DIMENSION OF REEL(FREE SIZE)

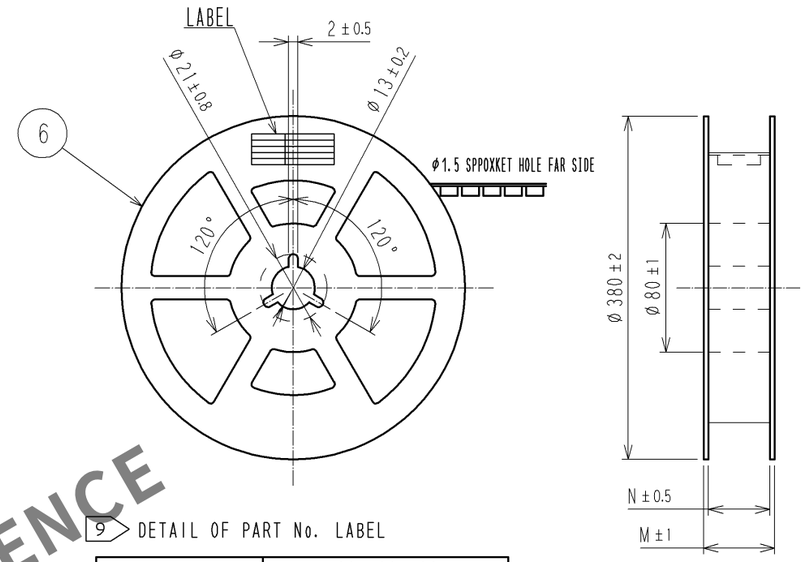

9 DETAIL OF PART No. LABEL

製造年月日	** ** **
製品コード	CL684-****-*-51
製品名	DF40B(2.0)-*DS-0.4V(51)
数量	4000
納入者	ヒロセ電機(株)

E-E(10～30POS.)

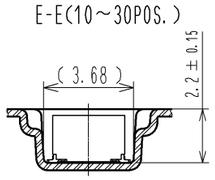

E-E(40～100POS.)

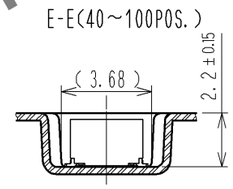

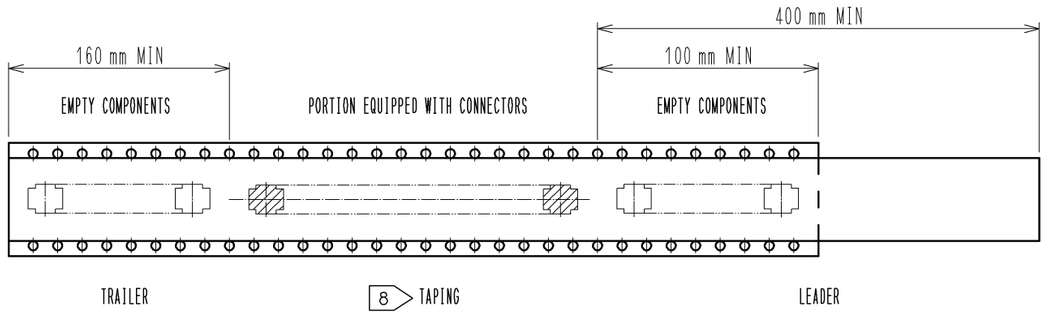

PART NO.	H	J	K	L	M	N
DF40B(2.0)-10DS-0.4V(55)	16	—	7.5	4.9	21.5	17.5
DF40B(2.0)-12DS-0.4V(55)	16	—	7.5	5.3	21.5	17.5
DF40B(2.0)-20DS-0.4V(55)	16	—	7.5	6.9	21.5	17.5
DF40B(2.0)-24DS-0.4V(55)	16	—	7.5	7.7	21.5	17.5
DF40B(2.0)-30DS-0.4V(55)	24	—	11.5	8.9	29.5	25.5
DF40B(2.0)-40DS-0.4V(55)	24	—	11.5	10.9	29.5	25.5
DF40B(2.0)-50DS-0.4V(55)	24	—	11.5	12.9	29.5	25.5
DF40B(2.0)-60DS-0.4V(55)	24	—	11.5	14.9	29.5	25.5
DF40B(2.0)-70DS-0.4V(55)	32	28.4	14.2	16.9	37.5	33.5
DF40B(2.0)-80DS-0.4V(55)	32	28.4	14.2	18.9	37.5	33.5
DF40B(2.0)-90DS-0.4V(55)	44	40.4	20.2	20.9	49.5	45.5
DF40B(2.0)-100DS-0.4V(55)	44	40.4	20.2	22.9	49.5	45.5

NOTES 6. PER REEL 4000 CONNECTORS.
7. THE DIMENSIONS IN PARENTHESES ARE FOR REFERENCE.
8 REFER TO JIS C 0806(PACKING OF COMPONENTS FOR AUTOMATIC HANDLING)
9 DETAIL OF PART NO. LABEL IS WRITTEN IN JAPANESE.
PART NO. LABEL DESCRIBS THE FOLLOWING INFORMATION FROM TOP.
PRODUCTION DATE:
PRODUCT CODE: CL684-****-*-51
PART NUMBER: DF40B(2.0)-*DS-0.4V(51)
NUMBER OF PIECES: 4000 PIECES
SUPPLIER NAME: HIROSE ELECTRIC CO., LTD.
10 TO 60 POSITIONS EMBOSSED CARRIER TAPE HAS
10 THE SPROCKET HOLE ON ONE SIDES.

HRS DRAWING FOR REFERENCE

HRS

図番：	EDC3-332419-01
製品名：	DF40B(2.0)-*DS-0.4V(51)
製品コード	CL684

△ 2/2