May.1.2024 Copyright 2024 HIROSE ELECTRIC CO., LTD. All Rights Reserved.
In case of consideration for using Automotive equipment / device which demand high reliability, kindly contact our sales window correspondents.

RECOMMENDED LAND PATTERN DIMENSION OF PCB (MOUNTING SIDE)

(RECOMMENDED METAL MASK THICKNESS:0.2mm)

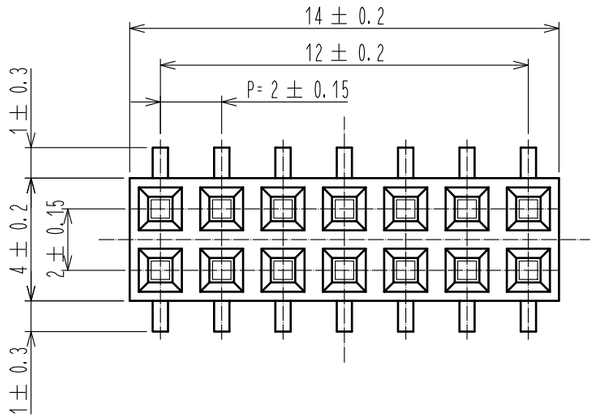

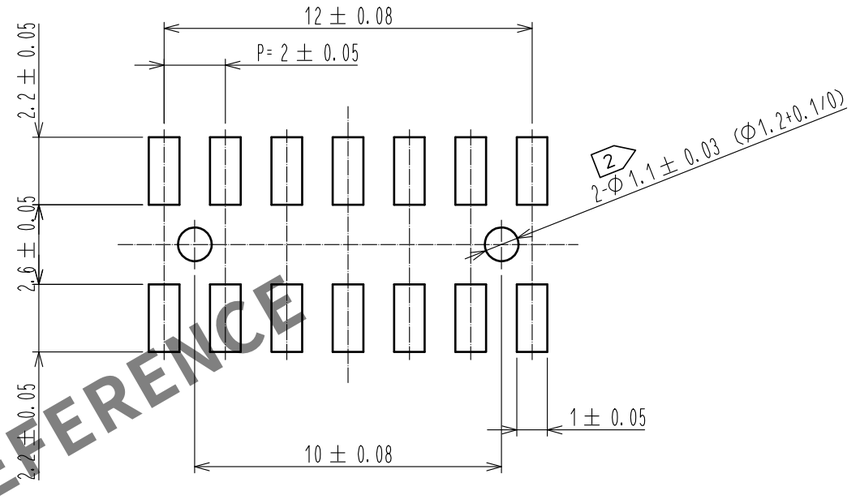

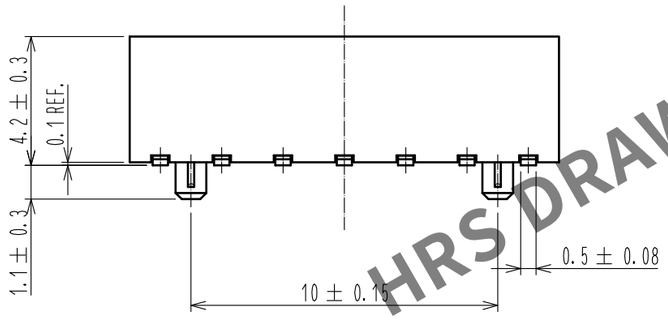

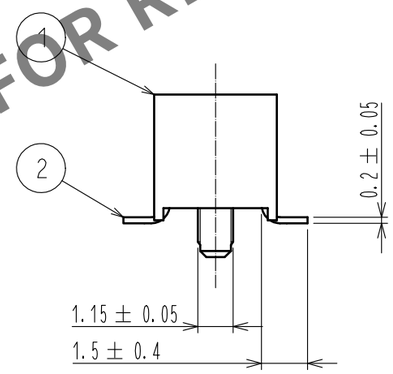

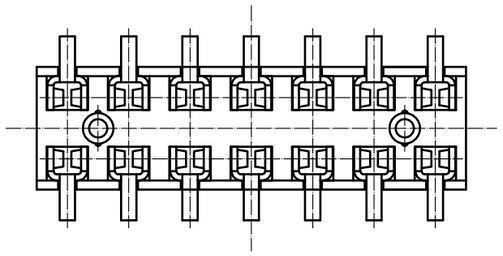

NOTES 1. LEAD CO-PLANARITY SHALL BE 0.15 MAX.
2 FOR AUTOMATED MOUNTING, RECOMMENDED THROUH HOLE DIAMETER OF BOSS IS 1.2+0.1/0.

NO.	MATERIAL	FINISH , REMARKS
1	POLYPHENYLENE SULFIDE	LIGHT BROWN, UL94V-0

NO.	MATERIAL	FINISH , REMARKS
2	PHOSPHOR BRONZE	CONTACT: GOLD PLATING 0.2μm MIN LEAD :TIN REFLOW PLATING 1μm MIN UNDER : NICKEL PLATING 1μm MIN

UNITS	SCALE	COUNT	DESCRIPTION OF REVISIONS	DESIGNED	CHECKED	DATE
mm	5:1	0				

HIROSE ELECTRIC CO., LTD.

APPROVED	:HS. OKAWA	15. 07. 16	DRAWING NO.	EDC-082678-71-21
CHECKED	:HT. YAMAGUCHI	15. 07. 16	PART NO.	A3A-14DA-2SV(71)
DESIGNED	:MT. ITANO	15. 07. 16	CODE NO.	CL621-1145-9-71
DRAWN	:MT. ITANO	15. 07. 16		

HRS DRAWING FOR REFERENCE