Apr.1.2024 Copyright 2024 HIROSE ELECTRIC CO., LTD. All Rights Reserved.
In case of consideration for using Automotive equipment / device which demand high reliability, kindly contact our sales window correspondents.

	COUNT	DESCRIPTION OF REVISIONS	BY	CHKD	DATE		COUNT	DESCRIPTION OF REVISIONS	BY	CHKD	DATE
△					. .	△					. .
△					. .	△					. .
△					. .	△					. .

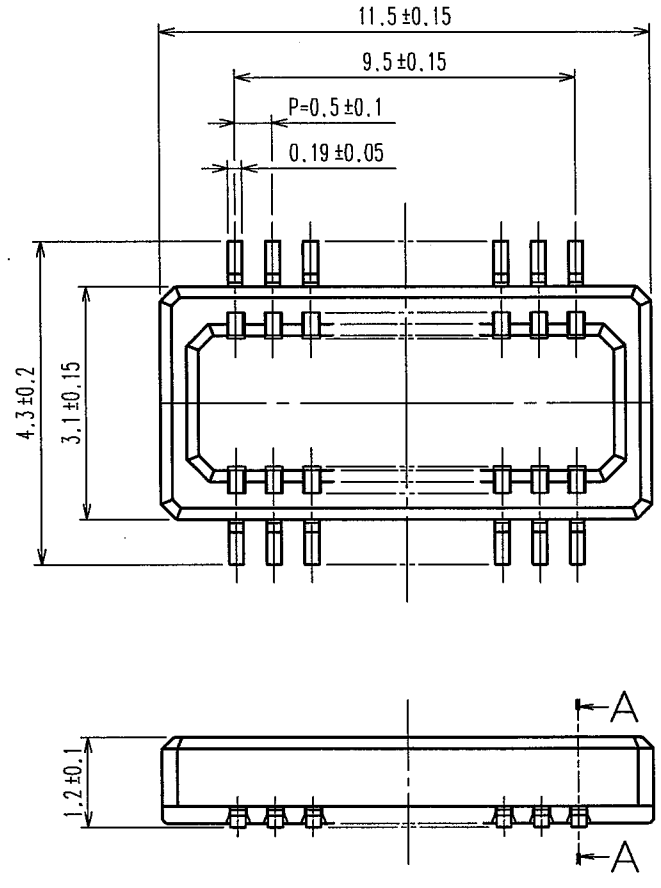

Fig.1 : RECOMMENDED PATTERN

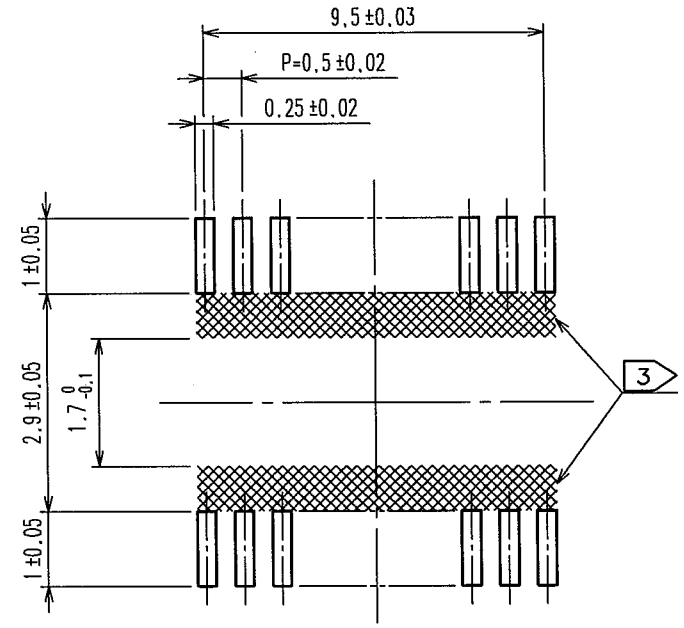

Fig.2 : PLATING SPECIFICATION (40:1)

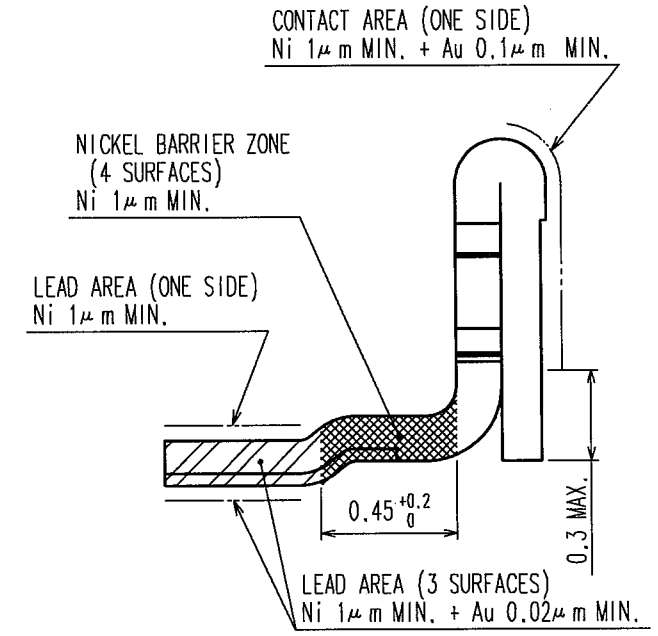

OTHERS : Ni 1μm MIN. + Au FLASH

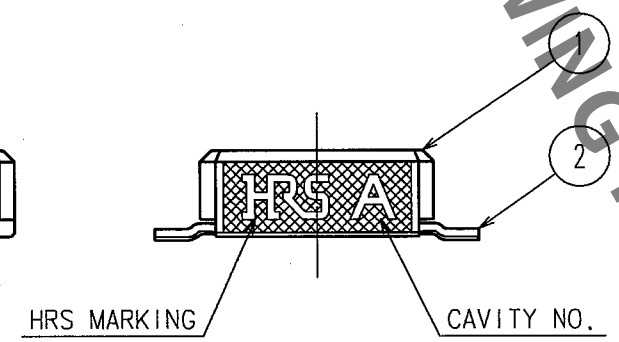

Fig.3 : A-A CROSS SECTION VIEW

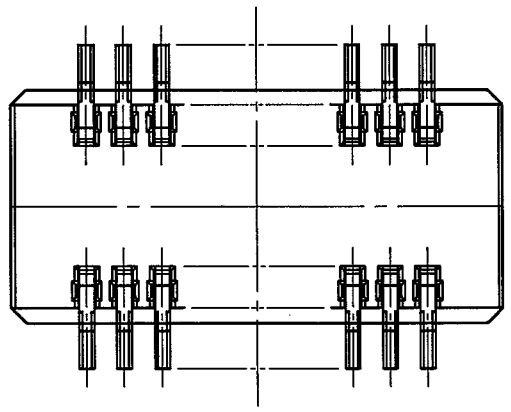

Fig.4 : MATING VIEW

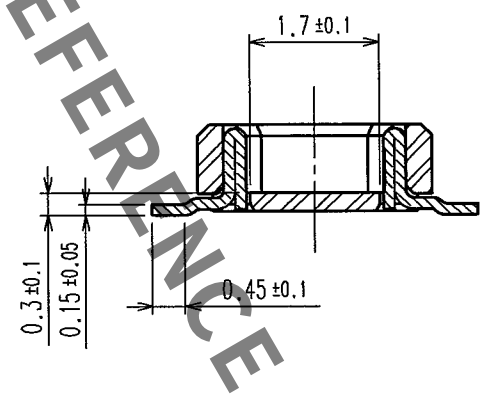

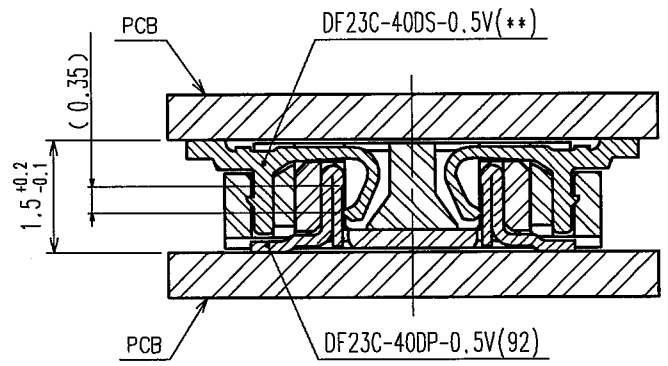

HRS DRAWING FOR REFERENCE

NOTES 1 LEAD CO-PLANARITY SHALL BE 0.1mm MAX.
2 REFER TO Fig.2
3 WHEN A PART MARKED WITH ▒ HAS A PATTERN BUT NO RESIST ON IT, TAKE CARE TO PREVENT THE CONNECTOR FROM TOUCHING IT.

NO.	MATERIAL	FINISH, REMARKS	NO.	MATERIAL	FINISH, REMARKS
2	PHOSPHOR BRONZE	2	4	POLYESTER	CLEAR
1	LCP	BLACK,UL94V-0	3	PS	CLEAR

CODE NO.(OLD)	DRAWN	DESIGNED	CHECKED	APPROVED	RELEASED
	F.Matsuki '04.01.15	T.Yamamoto '04.1.15	T.Sakata '04.1.16	T.Sakata '04.1.16	. .

SCALE 10 : 1
UNITS mm

DRAWING NO. EDC3-164005-02

PART NO. DF23C-40DP-0.5V(92)

HRS HIROSE ELECTRIC CO., LTD

CODE NO. CL688-0803-3-92

1/2

TO

Apr.1.2024 Copyright 2024 HIROSE ELECTRIC CO., LTD. All Rights Reserved.
In case of consideration for using Automotive equipment / device which demand high reliability, kindly contact our sales window correspondents.

	COUNT	DESCRIPTION OF REVISIONS	BY	CHKD	DATE		COUNT	DESCRIPTION OF REVISIONS	BY	CHKD	DATE
△					. .	△					. .
△					. .	△					. .
△					. .	△					. .

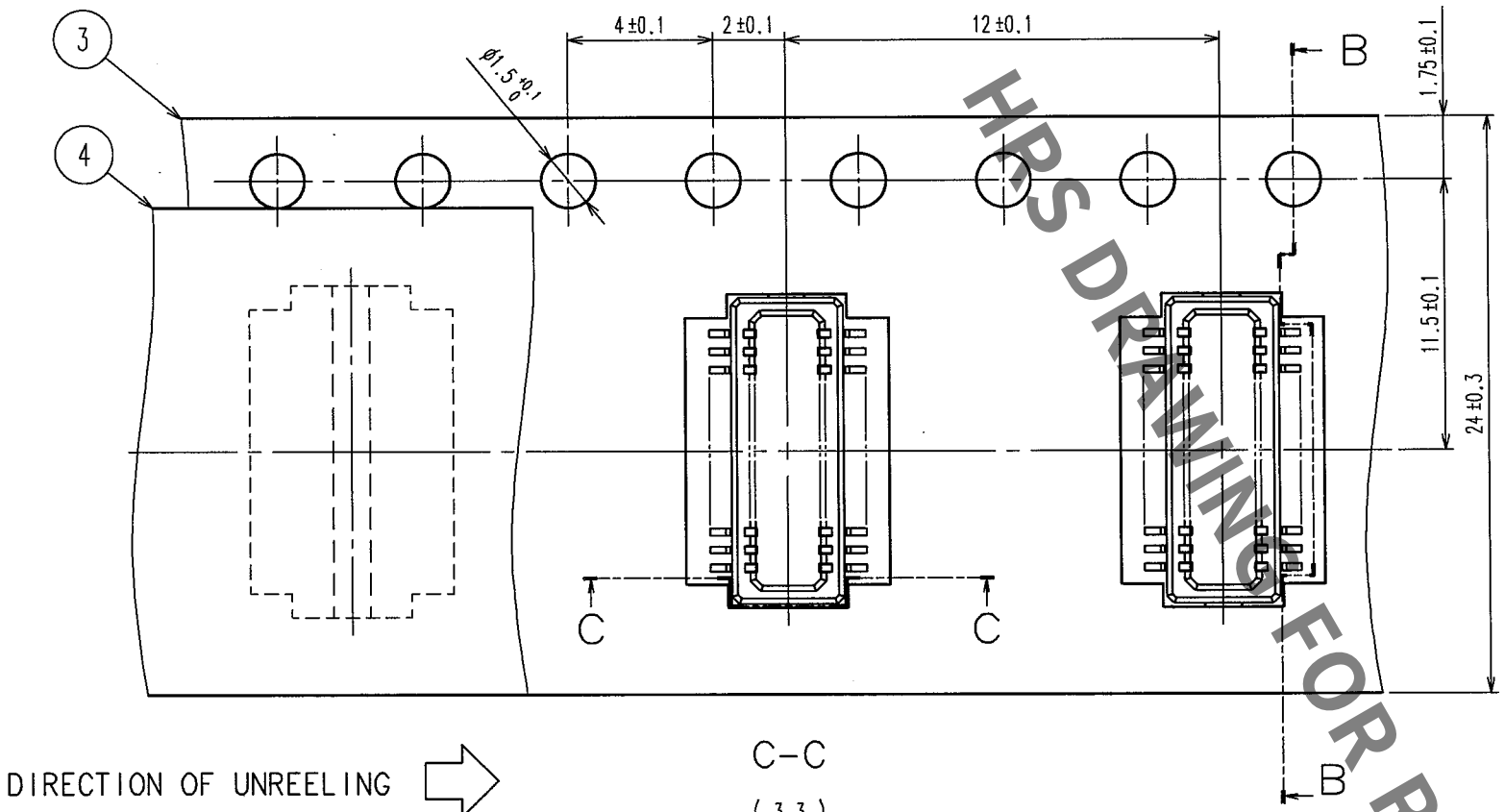

DIRECTION OF UNREELING

C–C

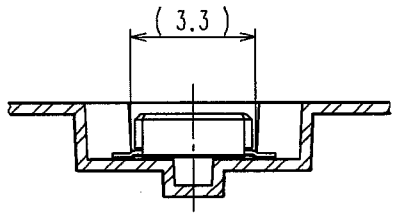

B–B

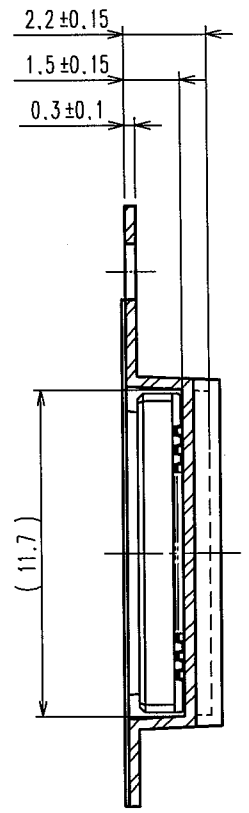

Fig.6 : REEL DIMENSIONS (FREE)

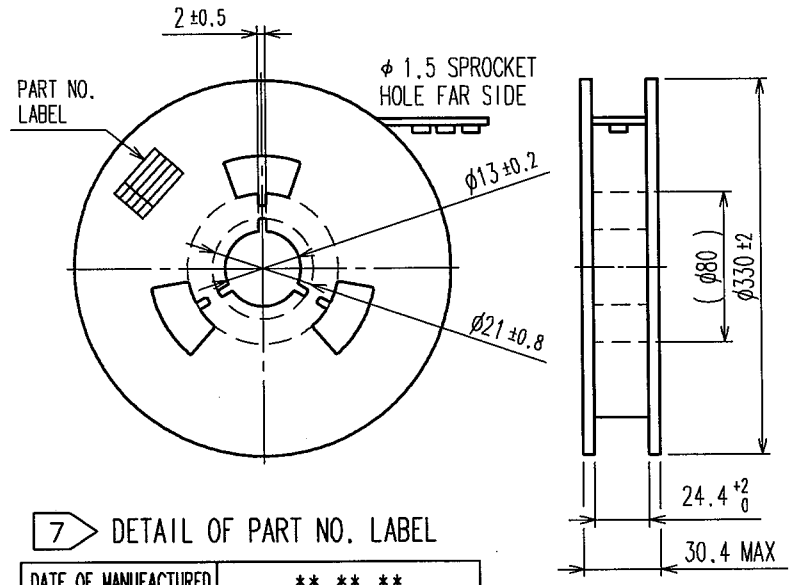

7 DETAIL OF PART NO. LABEL

DATE OF MANUFACTURED	** ** **
CODE NO.	CL688-0803-3-92
PART NO.	DF23C-40DP-0.5V(92)
QUANTITY	2000
SUPPLIER	HIROSE ELECTRIC CO.,LTD.

6 Fig.5 : TAPING

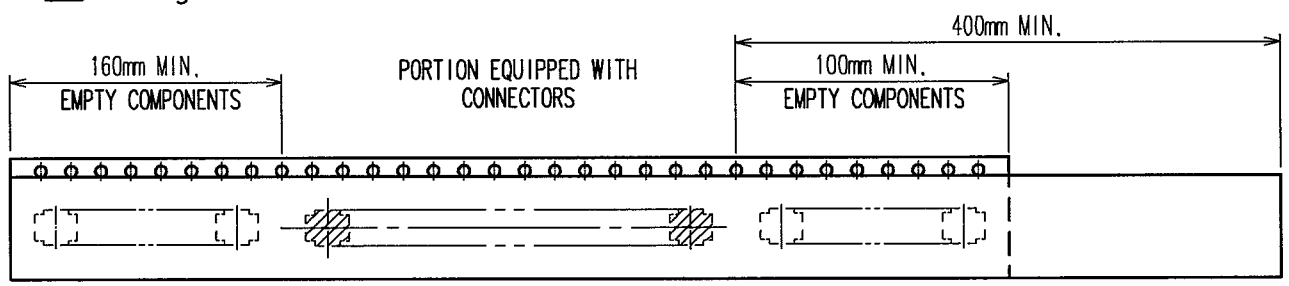

Fig.6 : PACKAGING SPECIFICATION (FREE)

PACKAGING DIMENSION

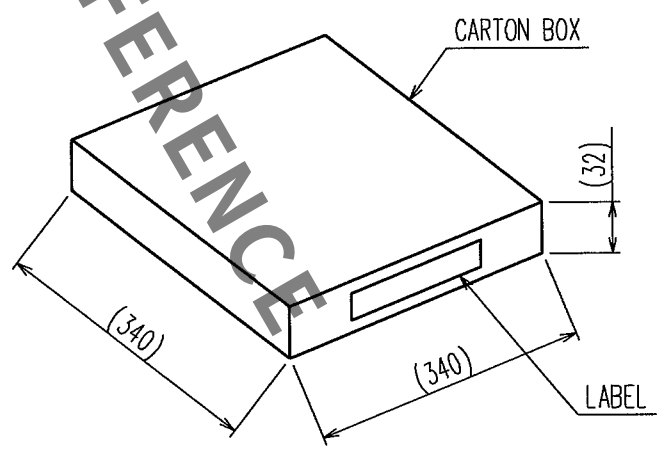

DETAIL OF LABEL

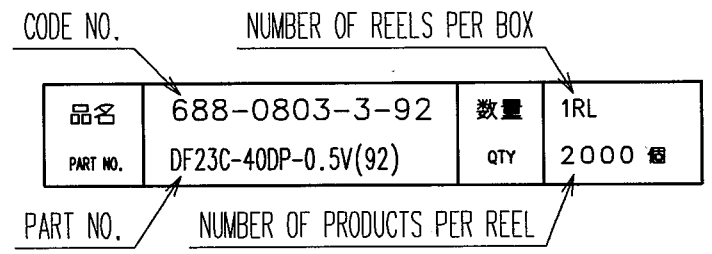

NOTES 4 PER REEL 2000 CONNECTORS
5 THE DIMENSIONS IN PARENTHESES ARE FOR REFERENCE.
6 REFER TO JIS C 0806 (PACKAGING OF COMPONENTS FOR AUTOMATIC HANDLING)
7 DETAIL OF PART NO. LABEL IS WRITTEN IN JAPANESE.

TO

CODE NO.(OLD)	DRAWN	DESIGNED	CHECKED	APPROVED	RELEASED
	F.Matsuki '04.01.15	T. Yamamoto '04.1.16	T. Sekata '04.1.16	T. Sekata '04.1.16	

SCALE 5 : 1	DRAWING NO. EDC3-164005-02	PART NO. DF23C-40DP-0.5V(92)
UNITS mm	HRS HIROSE ELECTRIC CO., LTD	CODE NO. CL688-0803-3-92 2/2

HRS DRAWING FOR REFERENCE