Apr.1.2024 Copyright 2024 HIROSE ELECTRIC CO., LTD. All Rights Reserved.
In case of consideration for using Automotive equipment / device which demand high reliability, kindly contact our sales window correspondents.

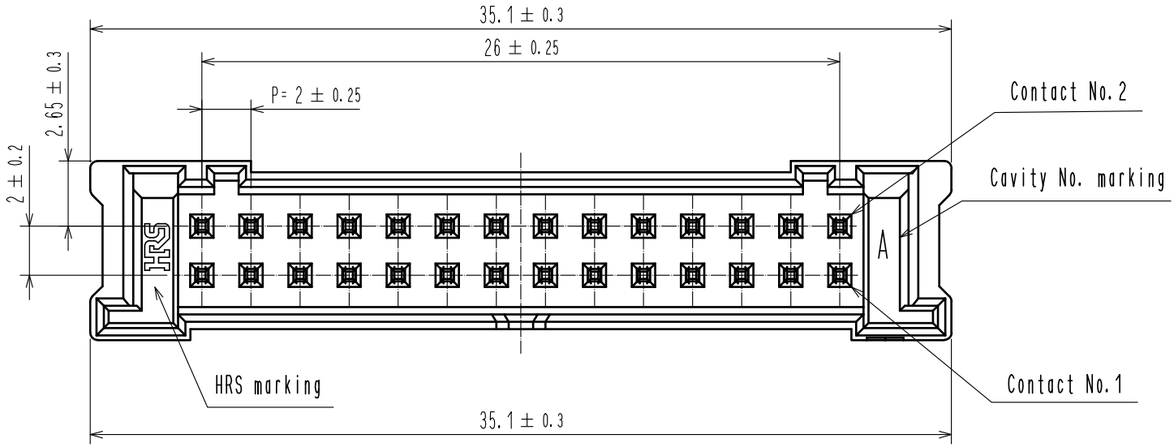

RECOMMENDED PATTERN(FREE)
(BOAD THICKNESS t=1.6mm)

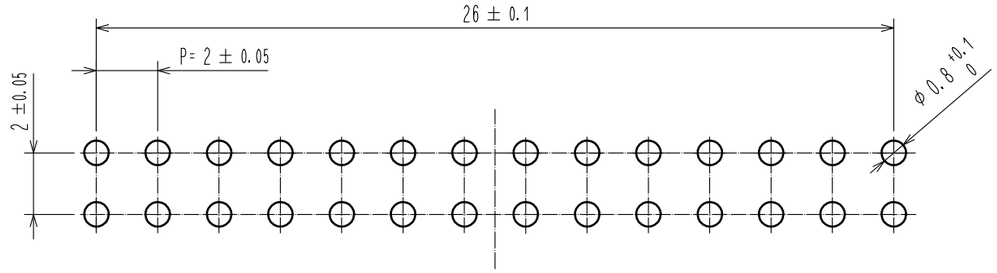

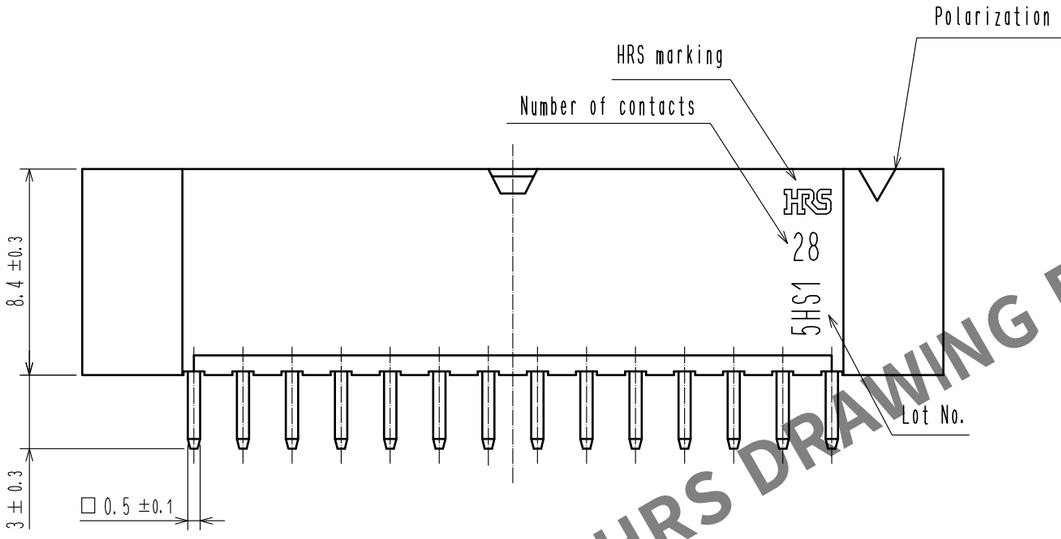

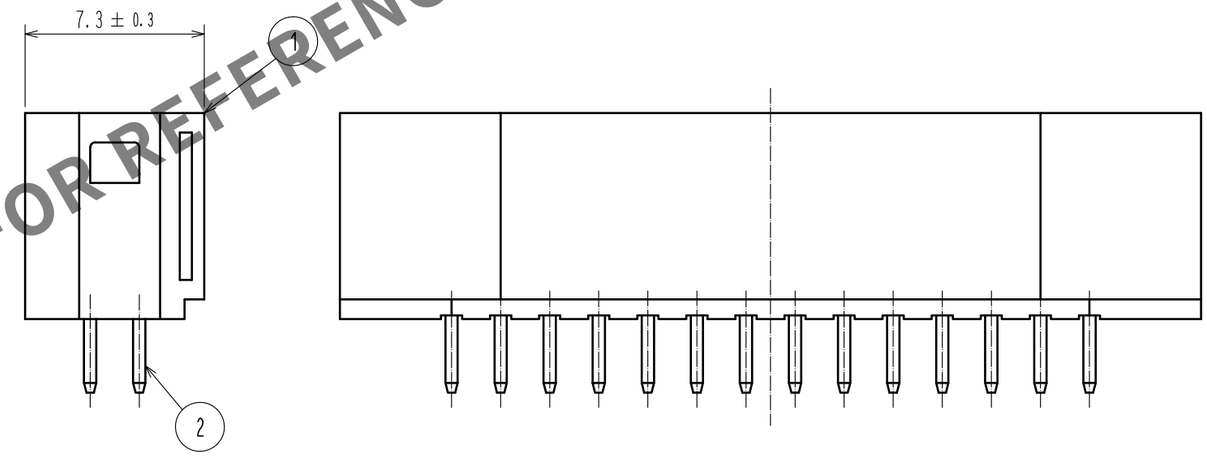

MATING FIGURE (2:1)

HRS DRAWING FOR REFERENCE

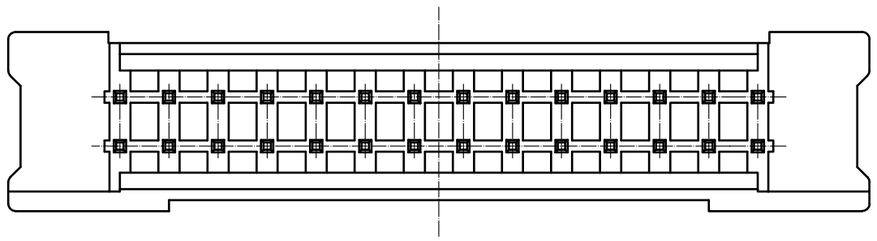

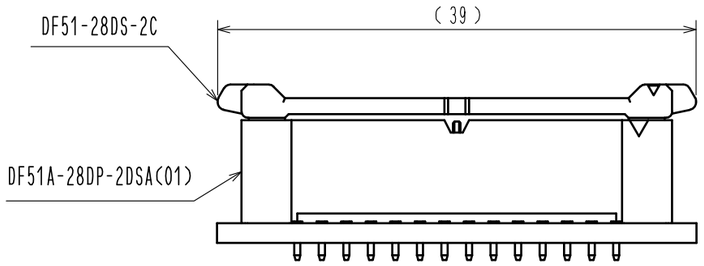

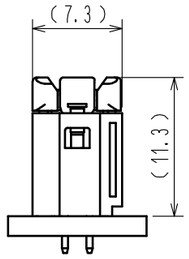

Note 1. Per pack : 100 Pieces.
2. The dimension parenthesis are for reference.
△1 3. UL(File No.E52653),
C-UL(File No.E52653) authorization article.

NO.	MATERIAL	FINISH , REMARKS
1	PBT	UL94V-0, BLACK
2	BRASS	SURFACE:Au PLATING 0.1μm MIN UNDER PLATING:NICKEL PLATING 0.5μm MIN

UNITS	SCALE		COUNT	DESCRIPTION OF REVISIONS	DESIGNED	CHECKED	DATE
mm	4 : 1	△1	1	DIS-H-00004483	TS.MIYAKI	SZ.ONO	20181206

HIROSE ELECTRIC CO., LTD.

APPROVED	: HS. OKAWA	20180320	DRAWING NO.	EDC-363515-01-00
CHECKED	: ST. WADA	20180320	PART NO.	DF51A-28DP-2DSA(01)
DESIGNED	: TH. SATO	20180320	CODE NO.	CL543-5055-0-01 △1 1/1
DRAWN	: TH. SATO	20180320		

FORM HC0011-5-7