Apr.1.2024 Copyright 2024 HIROSE ELECTRIC CO., LTD. All Rights Reserved.
In case of consideration for using Automotive equipment / device which demand high reliability, kindly contact our sales window correspondents.

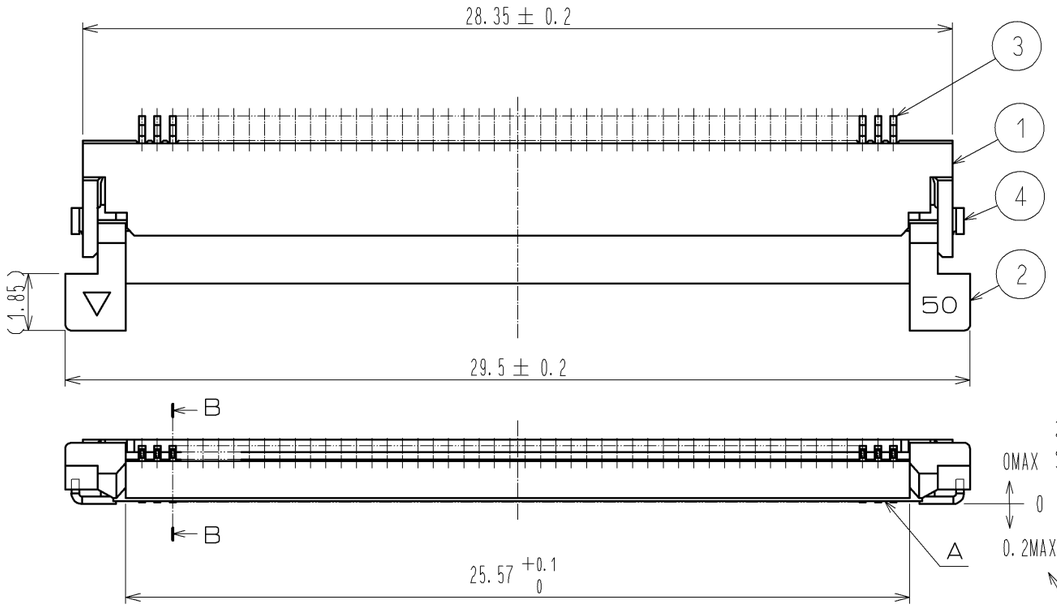

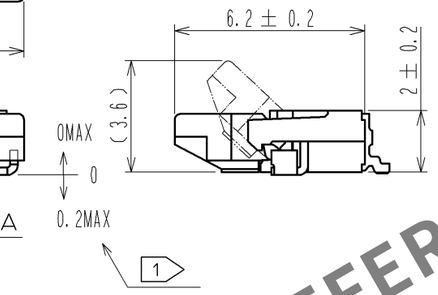

RECOMMENDED FPC, FFC(FREE)

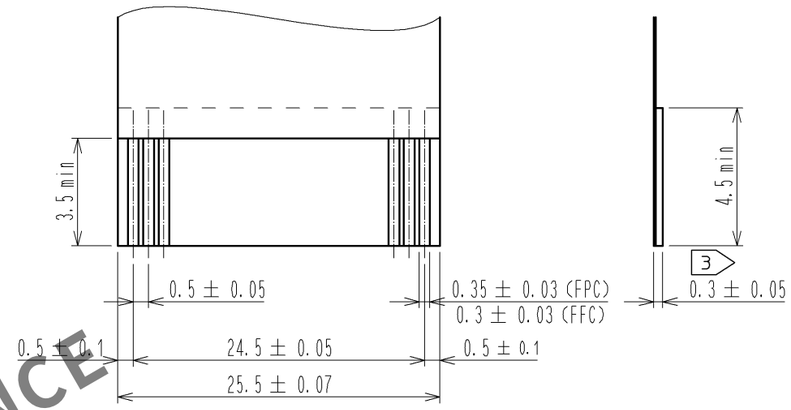

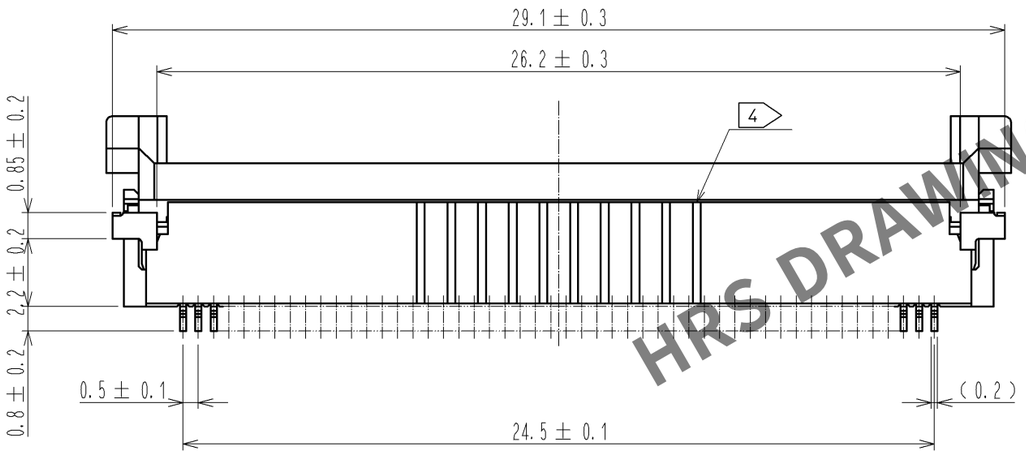

RECOMMENDED LAND PATTERN, METAL MASK(FREE)

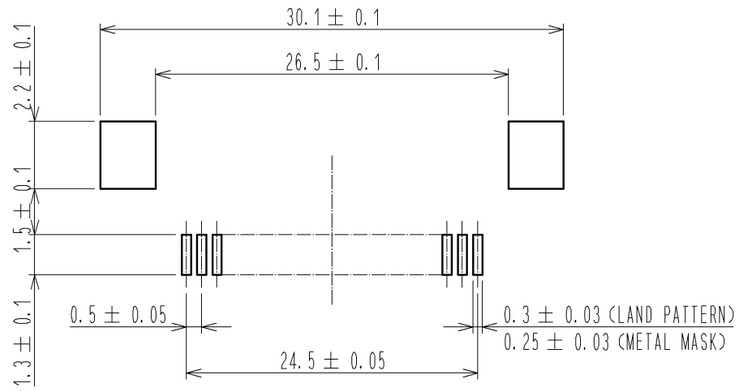

B−B(10:1)

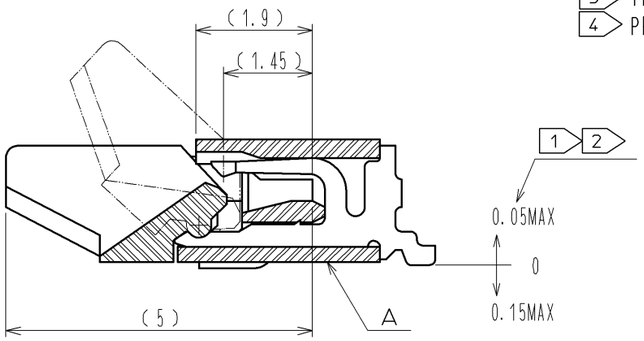

NOTE
1. REFERENCE IS A.
2. LEAD CO-PLANARITY SHALL BE 0.1 MAX.
3. THICKNESS OF SUPPORTING TAPE SHALL BE 0.188(7.5mil) MIN.
4. PREVENTIVE SINK MARK (DEPTH 0.05) IS INDICATED.

RECOMMENDED METAL MASK THICKNESS t=0.15

HRS DRAWING FOR REFERENCE

NO.	MATERIAL	FINISH , REMARKS	NO.	MATERIAL	FINISH , REMARKS
4	BRASS	TIN PLATING 1μmMIN OVER NICKEL 1μmMIN.	8	(CONNECTOR)	
3	PHOSPHOR BRONZE	GOLD PLATING 0.05μmMIN OVER NICKEL 1μmMIN.	7	POLYSTYRENE	
2	PPS	(DEEP BROWN) UL94V-0	6	POLYESTER	
1	POLYAMIDE	(BEIGE) UL94V-0	5	POLYSTYRENE	

UNITS	SCALE	COUNT	DESCRIPTION OF REVISIONS	DESIGNED	CHECKED	DATE
mm	5 : 1	1	DIS-F-002766	MK. YASUMI	HS. SAKAMOTO	09.11.17

HIROSE ELECTRIC CO., LTD.

APPROVED	: MO. ISHIDA	05.01.05	DRAWING NO.	EDC3-150559-51
CHECED	: RI. TAKAYASU	05.01.05	PART NO.	FH12A-50S-0.5SH(55)
DESIGNED	: TH. MURAI	05.01.05	CODE NO.	CL586-0559-3-55
DRAWN	: TH. MURAI	05.01.05		1/2

FORM HC0011-5-7

Apr.1.2024 Copyright 2024 HIROSE ELECTRIC CO., LTD. All Rights Reserved.
In case of consideration for using Automotive equipment / device which demand high reliability, kindly contact our sales window correspondents.

EMBOSSED CARRIER TAPE DIMENSION(2:1)

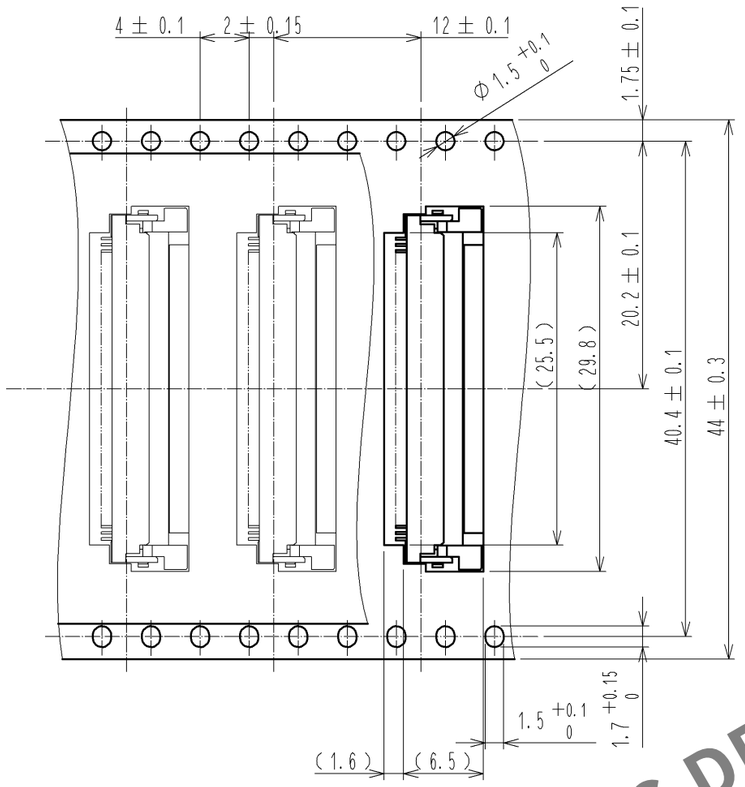

DIRECTION OF UNREELING

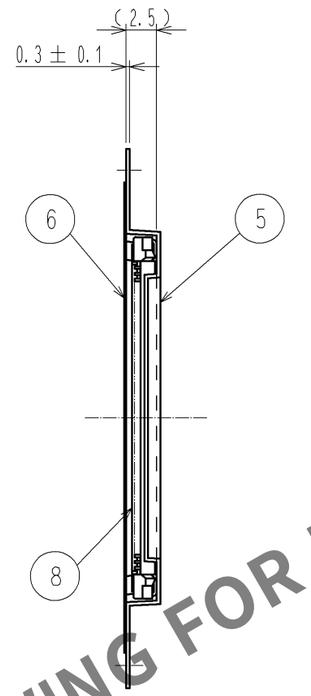

△1 REEL DIMENSION(FREE)

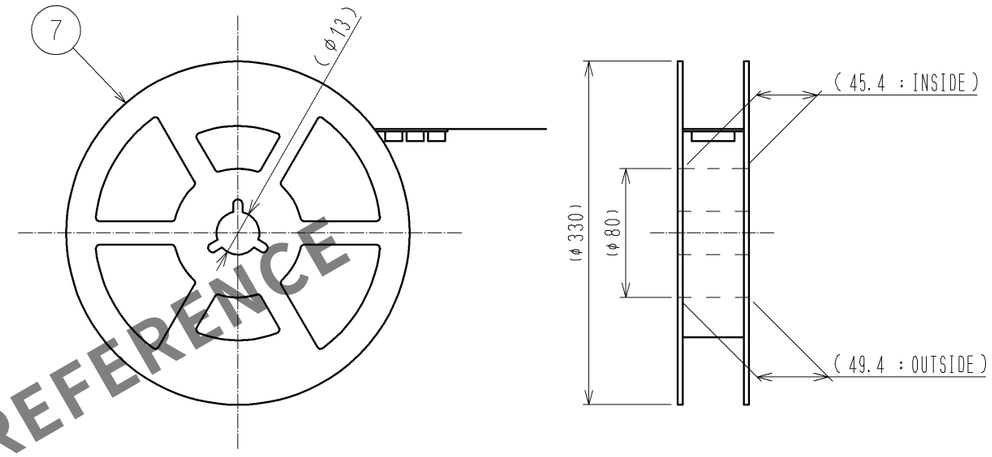

HRS DRAWING FOR REFERENCE

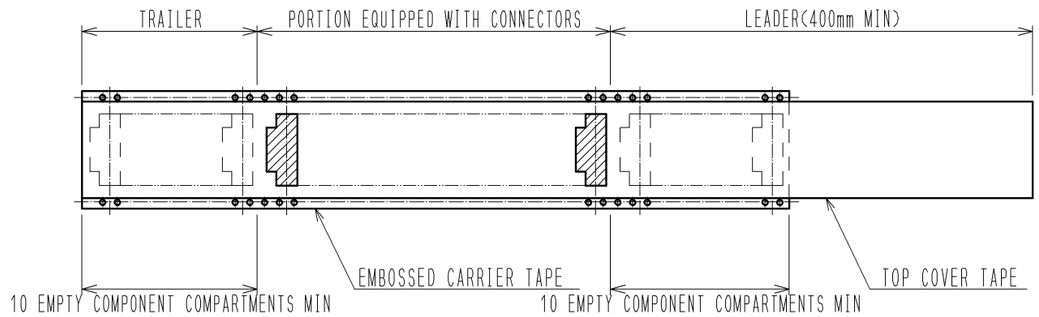

NOTE 5 THE DIMENSIONS IN PARENTHESES ARE FOR REFERENCE.
6 1 REEL:2000 CONNECTORS.

<DRAWING FOR PACKING>

HRS	DRAWING NO.	EDC3-150559-51
	PART NO.	FH12A-50S-0.5SH(55)
	CODE NO.	CL586-0559-3-55 △1 2/2