Apr.1.2024 Copyright 2024 HIROSE ELECTRIC CO., LTD. All Rights Reserved.
In case of consideration for using Automotive equipment / device which demand high reliability, kindly contact our sales window correspondents.

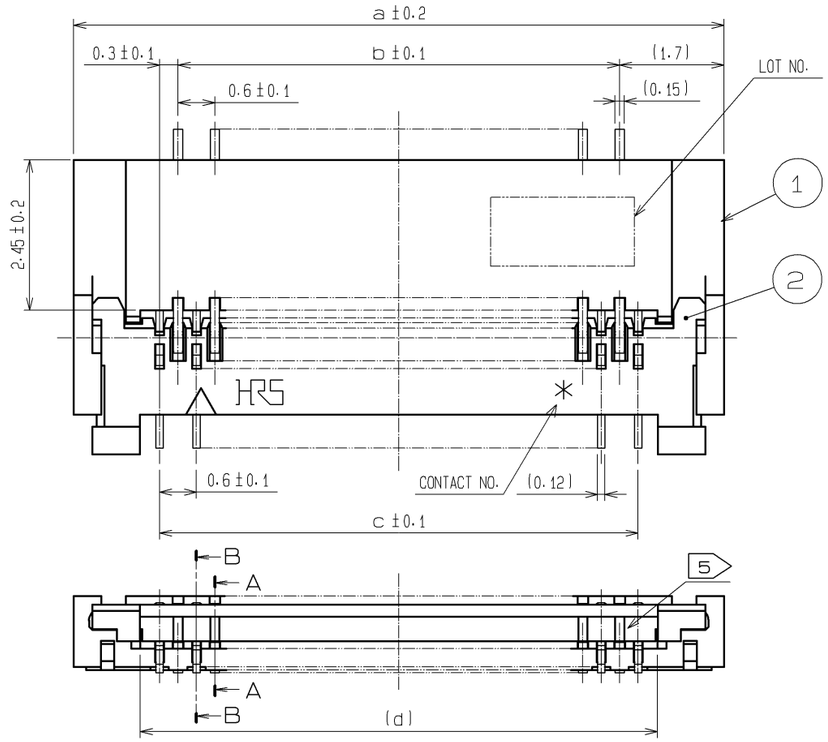

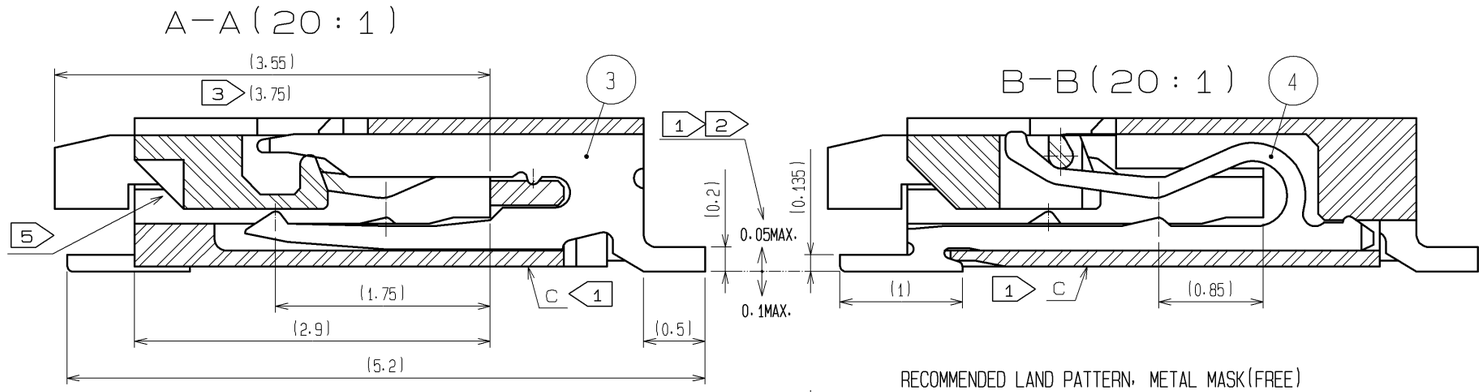

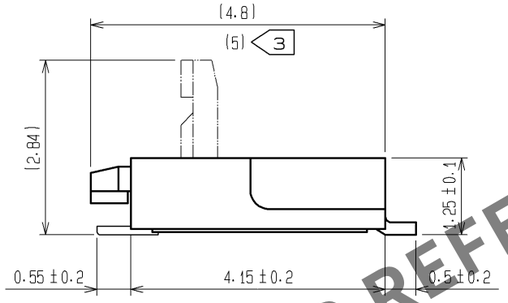

RECOMMENDED LAND PATTERN, METAL MASK(FREE)

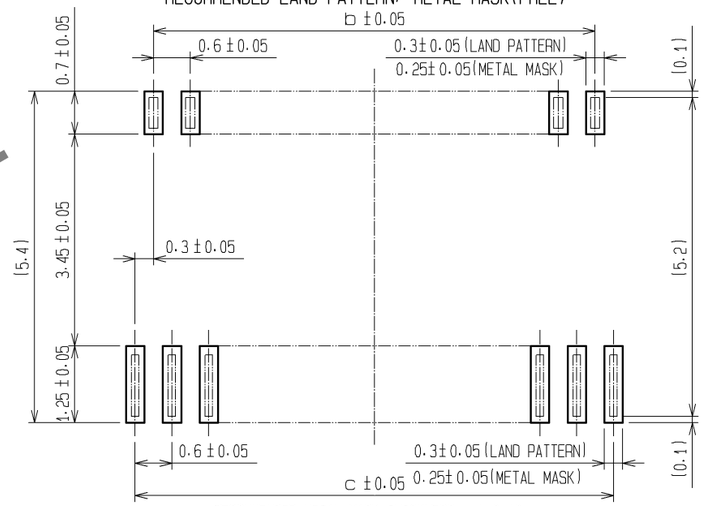

RECOMMENDED METAL MASK THICKNESS : t=0.10

NOTE
1. DIMENSIONS FROM REFERENCE SURFACE C (BOTTOM SURFACE OF HOUSING).
2. LEAD CO-PLANARITY SHALL BE 0.1 MAX.
3. LENGTH AFTER FPC IS INSERTED.
4. 0.3 $^{+0.04}_{-0.03}$ CAN BE APPLIED WITH LEAD PLATED.
5. PREVENTIVE HOLES FOR SINK MARK ARE APPLIED TO NUMBER OF CONTACT.
6. NOTE THAT PREVENTIVE HOLE FOR SINK MARK COULD BE ADDED FOR IMPROVEMENT. THE QUALITY REMAINS GOOD, EVEN WITH THE DARK SPOTS, WHICH COULD OCCASIONALLY OCCUR ON MOLDED PLASTIC.
7. THE SPECIFICATION OF (06) IS APPLIED TO NUMBER OF 51.

HRS DRAWING FOR REFERENCE

RECOMMENDED FPC(FREE)

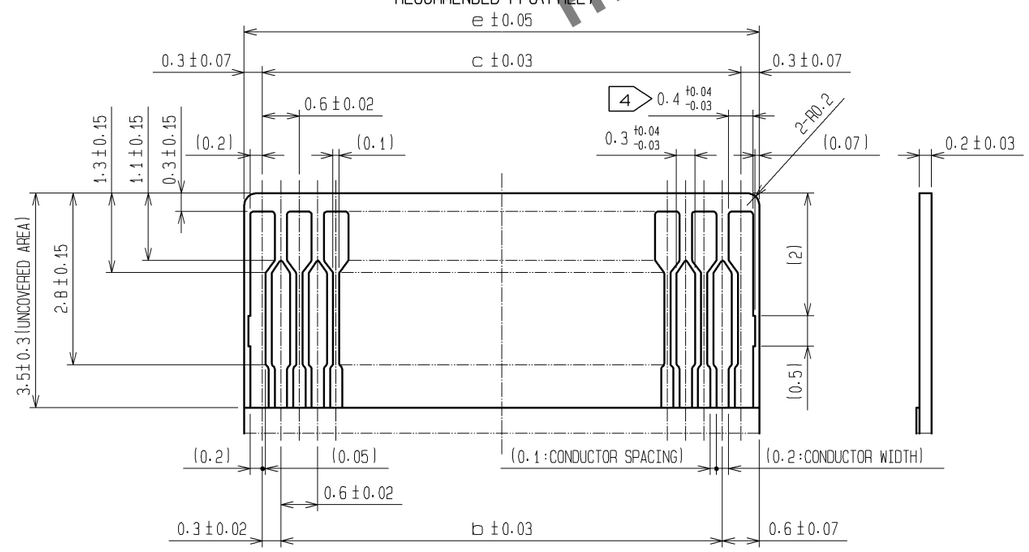

RECOMMENDED STIFFENER MATERIAL:POLYIMIDE, HEAT CURED ADHESIVE.

DIMENSION MATRIX

	PART NO.	CODE NO.	NO. OF CONTACT	a	b	c	d	e
	FH23-15S-0.3SHW(05)	CL586-1317-0-05	15	7.0	3.6	4.2	4.83	4.8
	FH23-17S-0.3SHW(05)	CL586-1300-7-05	17	7.6	4.2	4.8	5.43	5.4
	FH23-21S-0.3SHW(05)	CL586-1314-1-05	21	8.8	5.4	6.0	6.63	6.6
	FH23-23S-0.3SHW(05)	CL586-1324-5-05	23	9.4	6.0	6.6	7.23	7.2
	FH23-25S-0.3SHW(05)	CL586-1322-0-05	25	10.0	6.6	7.2	7.83	7.8
	FH23-27S-0.3SHW(05)	CL586-1308-9-05	27	10.6	7.2	7.8	8.43	8.4
	FH23-31S-0.3SHW(05)	CL586-1302-2-05	31	11.8	8.4	9.0	9.63	9.6
	FH23-33S-0.3SHW(05)	CL586-1304-8-05	33	12.4	9.0	9.6	10.23	10.2
	FH23-37S-0.3SHW(05)	CL586-1335-1-05	37	13.6	10.2	10.8	11.43	11.4
	FH23-39S-0.3SHW(05)	CL586-1306-3-05	39	14.2	10.8	11.4	12.03	12.0
	FH23-45S-0.3SHW(05)	CL586-1318-2-05	45	16.0	12.6	13.2	13.83	13.8
2 7	FH23-51S-0.3SHW(06)	CL586-1312-6-06	51	17.8	14.4	15.0	15.63	15.6
	FH23-61S-0.3SHW(05)	CL586-1310-0-05	61	20.8	17.4	18.0	18.63	18.6
	FH23-71S-0.3SHW(05)	CL586-1320-4-05	71	23.8	20.4	21.0	21.63	21.6

NO.	MATERIAL	FINISH , REMARKS	NO.	MATERIAL	FINISH , REMARKS
2	LCP	BLACK UL94V-0	4	PHOSPHOR BROZE	GOLD FLASH OVER NICKEL 1μm MIN.
1	LCP	BEIGE UL94V-0	3	PHOSPHOR BROZE	GOLD FLASH OVER NICKEL 1μm MIN.

UNITS	SCALE	COUNT	DESCRIPTION OF REVISIONS	DESIGNED	CHECKED	DATE
mm	10 : 1	2 11	DIS-F-002175	WR. YAMADA	TH. MURAI	07. 07. 17

HRS HIROSE ELECTRIC CO., LTD.

APPROVED	: MO. ISHIDA	05. 01. 05	DRAWING NO.	EDC3-153547-03
CHECED	: SS. WATANABE	05. 01. 05	PART NO.	FH23-*S-0.3SHW(05)
DESIGNED	: TO. SHIBUYA	05. 01. 05	CODE NO.	CL586
DRAWN	: TO. SHIBUYA	05. 01. 05		2 1/2

FORM NO. 229-1

Apr.1.2024 Copyright 2024 HIROSE ELECTRIC CO., LTD. All Rights Reserved.
In case of consideration for using Automotive equipment / device which demand high reliability, kindly contact our sales window correspondents.

<TAPE WIDTH:24mm MAX.>

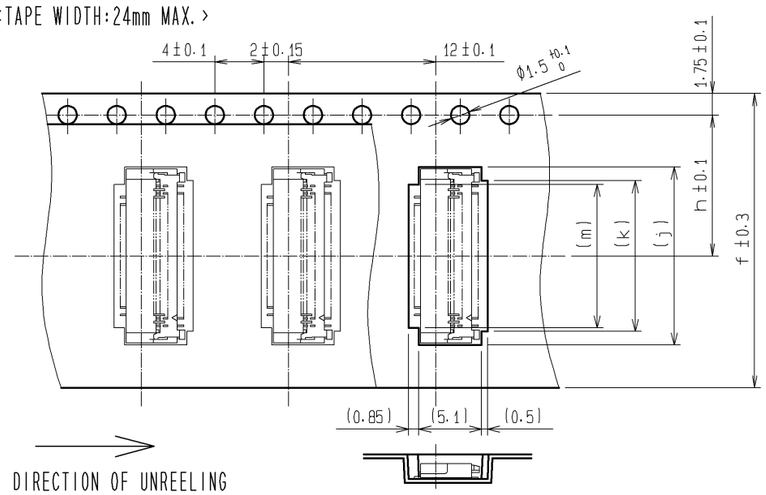

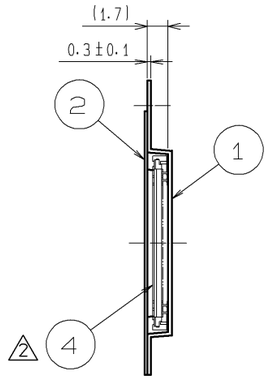

<TAPE WIDTH:32mm MIN.>

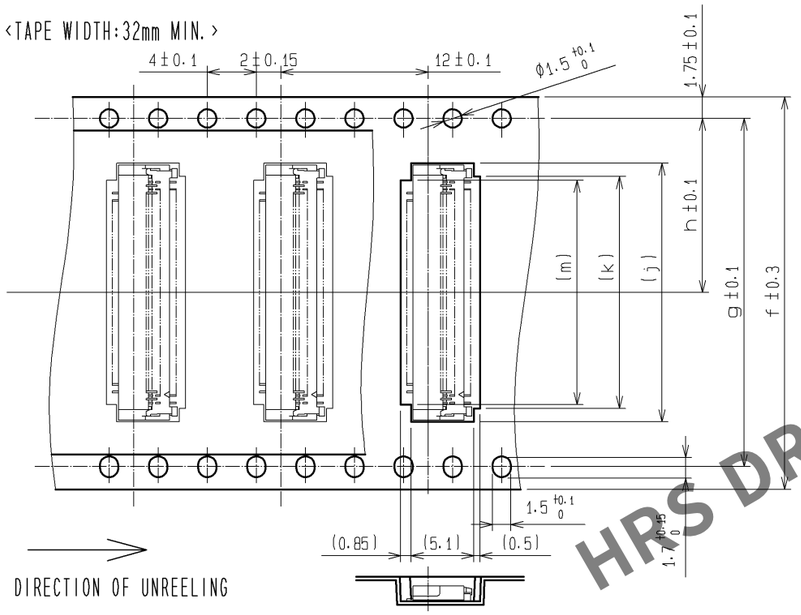

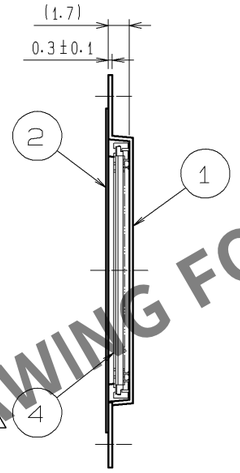

HRS DRAWING FOR REFERENCE

2 REEL DIMENSION(FREE)

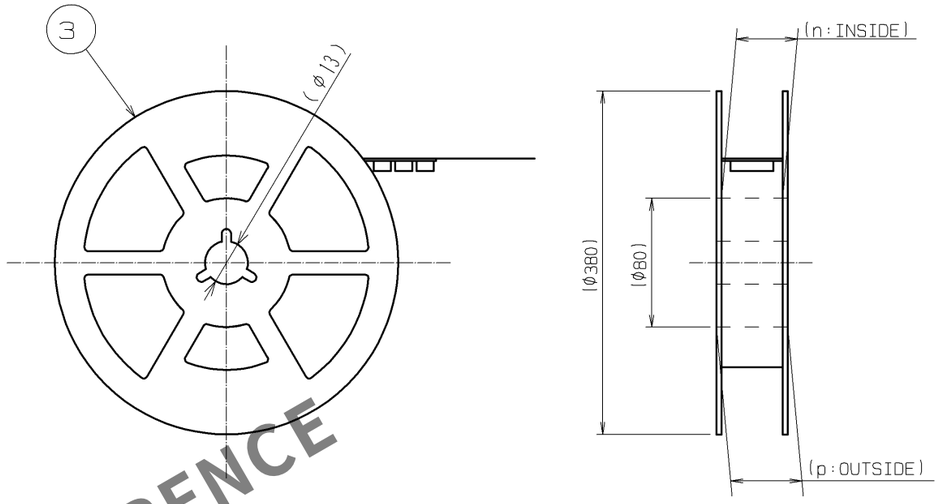

NOTE 1 THE DIMENSIONS IN PARENTHESES ARE FOR REFERENCE.
2 PER REEL : 2500 CONNECTORS.
2 3 COMPLIANT TO JIS C 0806 (PACKAGING OF COMPONENTS FOR AUTOMATIC HANDLING.)

DIMENSION MATRIX

PRT NO.	CODE NO.	NO. OF CONTACT	f	g	h	j	k	m	n (2)	p (2)
FH23-15S-0.3SHW(05)	CL586-1317-0-05	15	16		7.5	7.3	5.1	4.5	17.4	21.4
FH23-17S-0.3SHW(05)	CL586-1300-7-05	17	16		7.5	7.9	5.7	5.1	17.4	21.4
FH23-21S-0.3SHW(05)	CL586-1314-1-05	21	16		7.5	9.1	6.9	6.3	17.4	21.4
FH23-23S-0.3SHW(05)	CL586-1324-5-05	23	24		11.5	9.7	7.5	6.9	25.4	29.4
FH23-25S-0.3SHW(05)	CL586-1322-0-05	25	24		11.5	10.3	8.1	7.5	25.4	29.4
FH23-27S-0.3SHW(05)	CL586-1308-9-05	27	24		11.5	10.9	8.7	8.1	25.4	29.4
FH23-31S-0.3SHW(05)	CL586-1302-2-05	31	24		11.5	12.1	9.9	9.3	25.4	29.4
FH23-33S-0.3SHW(05)	CL586-1304-8-05	33	24		11.5	12.7	10.5	9.9	25.4	29.4
FH23-37S-0.3SHW(05)	CL586-1335-1-05	37	24		11.5	13.9	11.7	11.1	25.4	29.4
FH23-39S-0.3SHW(05)	CL586-1306-3-05	39	24		11.5	14.5	12.3	11.7	25.4	29.4
FH23-45S-0.3SHW(05)	CL586-1318-2-05	45	24		11.5	16.3	14.1	13.5	25.4	29.4
2 7 FH23-51S-0.3SHW(06)	CL586-1312-6-06	51	32	28.4	14.2	18.1	15.9	15.3	33.4	37.4
FH23-61S-0.3SHW(05)	CL586-1310-0-05	61	32	28.4	14.2	21.1	18.9	18.3	33.4	37.4
FH23-71S-0.3SHW(05)	CL586-1320-4-05	71	44	40.4	20.2	24.1	21.9	21.3	45.4	49.4

<TAPE WIDTH:24mm MAX.>

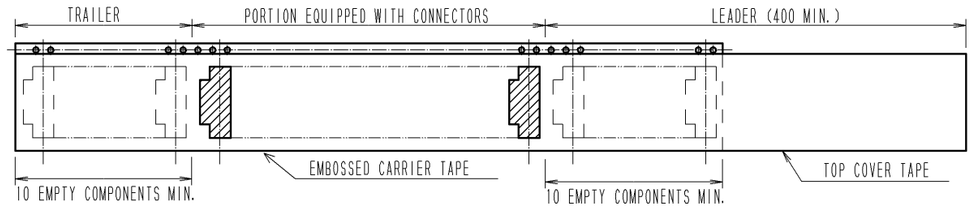

2 <TAPE WIDTH:32mm MIN.>

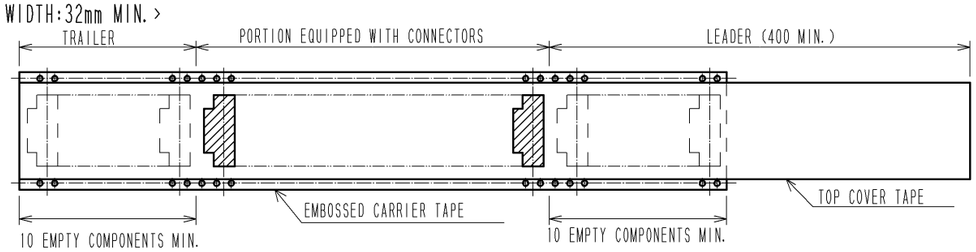

NO.	MATERIAL	FINISH , REMARKS	NO.	MATERIAL	FINISH , REMARKS
2	POLYESTER		4	(CONNECTOR)	
1	POLYSTYRENE		3	POLYSTYRENE	

UNITS	SCALE	COUNT	DESCRIPTION OF REVISIONS	DESIGNED	CHECKED	DATE
mm	2 : 1	2 11	DIS-F-002175	WR. YAMADA	TH. MURAI	07. 07. 17

HRS HIROSE ELECTRIC CO., LTD.

APPROVED	: MO. ISHIDA	05. 01. 05	DRAWING NO.	EDC3-153547-03
CHECED	: SS. WATANABE	05. 01. 05	PART NO.	FH23-*S-0.3SHW(05)
DESIGNED	: TO. SHIBUYA	05. 01. 05	CODE NO.	CL586
DRAWN	: TO. SHIBUYA	05. 01. 05		2 2/2

FORM NO. 229-1