Apr.1.2024 Copyright 2024 HIROSE ELECTRIC CO., LTD. All Rights Reserved.
In case of consideration for using Automotive equipment / device which demand high reliability, kindly contact our sales window correspondents.

	COUNT	DESCRIPTION OF REVISIONS	BY	CHKD	DATE		COUNT	DESCRIPTION OF REVISIONS	BY	CHKD	DATE
1	1	RE-F-06721	J.M	H.O	00.04.06						. .
					. .						. .
					. .						. .

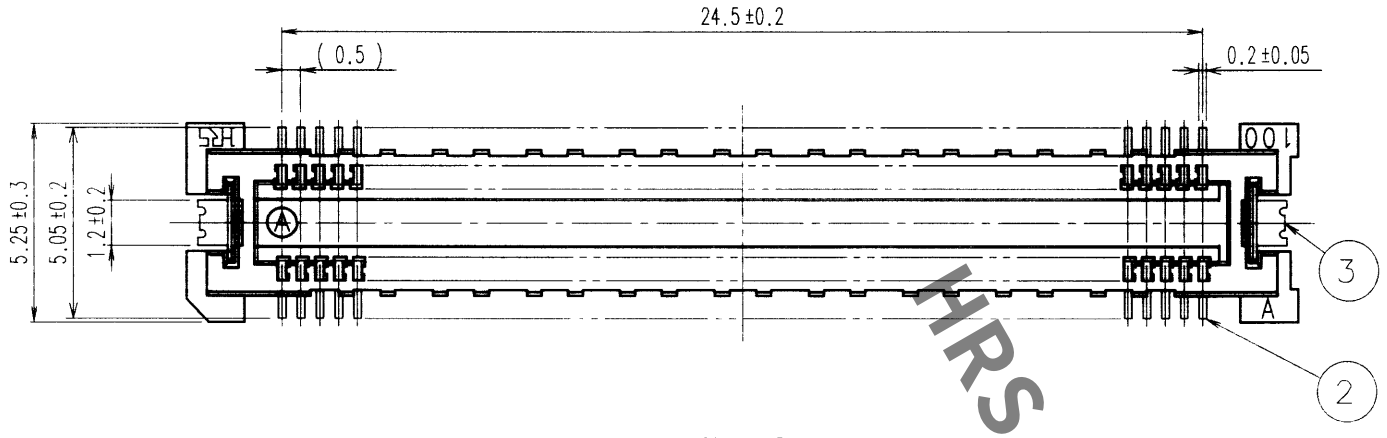

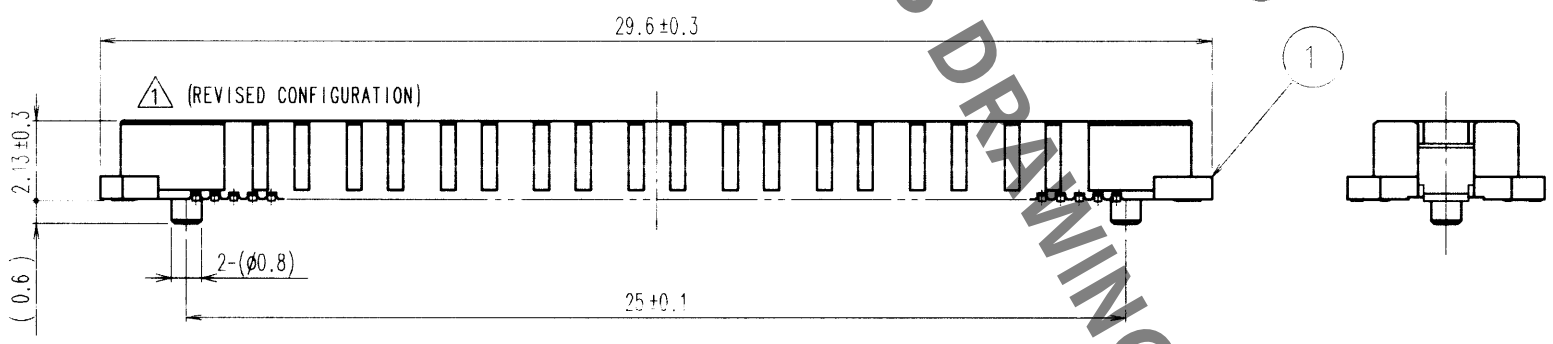

RECOMMENDED LAND PATTERN DIMENSION OF PCB

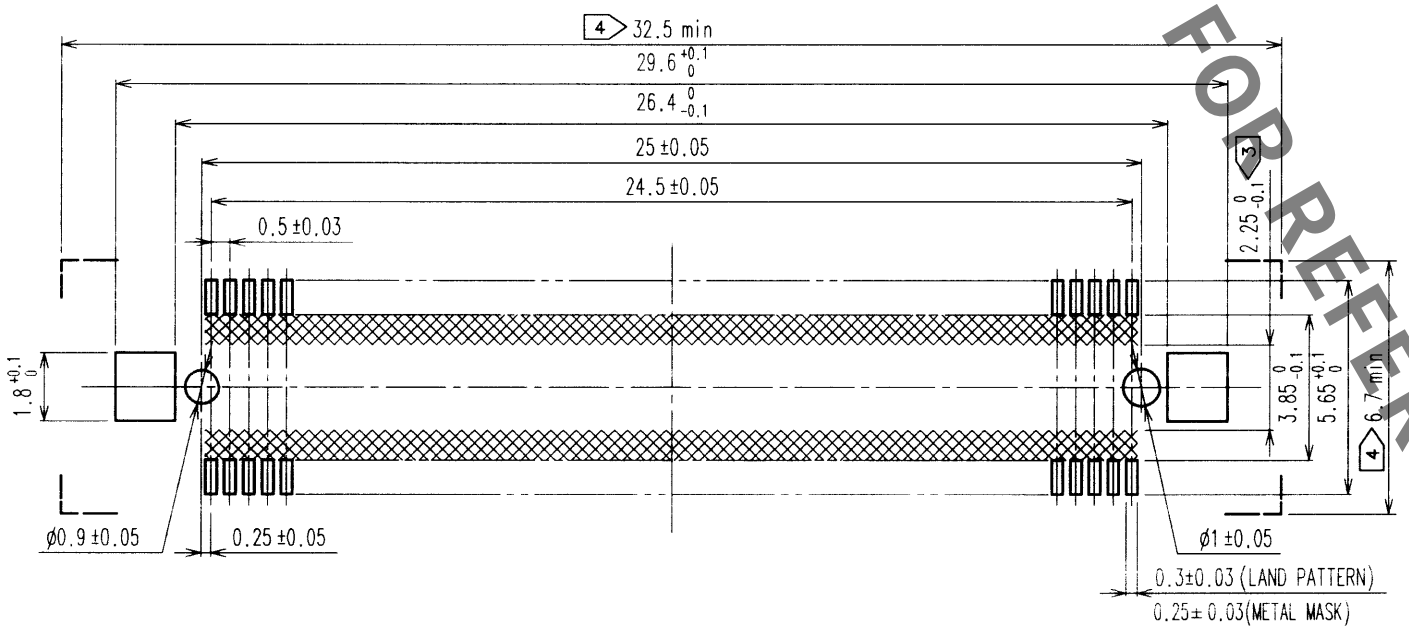

SIGNAL PORTION CROSS SECTION (10:1)

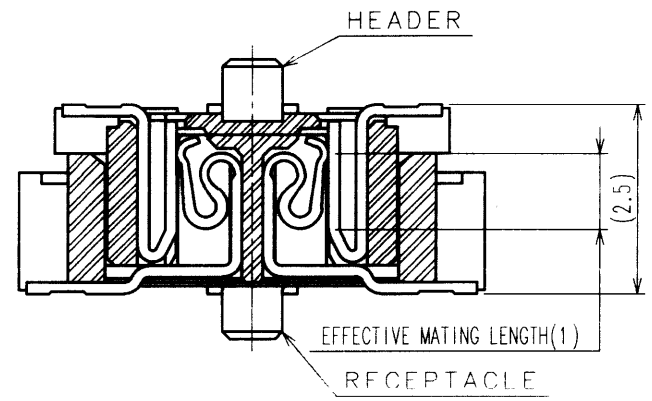

HRS DRAWING FOR REFERENCE

NO.	MATERIAL	FINISH, REMARKS	NO.	MATERIAL	FINISH, REMARKS
2	COPPER ALLOY	CONTACT AREA:GOLD (0.1μm) OVER NICKEL LEAD:GOLD FLASH OVER NICKEL			
1	LCP	BEIGE UL94V-0	3	PHOSPHOR BRONZE	TIN PLATED

NOTES
1. SMT LEAD-COPLANARITY:0.1 MAX.
2. THIS PRODUCT HAS NO POLAVITY TO PATTERN FOR MOUNTING.
3. MAKE SURE WIDTH OF PATTERN IS WITHIN THAT OF LAND ,OR LEAD MAY TOUCH PATTERN. (THIS APPLIES TO HATCHED ▨ AREA.)
4. DO NOT MOUNT OTHER DEVICES ONTO [ ] AREA ,OR MATING PAIR CANNOT BE MATED.

TO
PCK

CODE NO. (OLD)	DRAWN	DESIGNED	CHECKED	APPROVED	RELEASED
CL	J.MATSUKAWA 00.01.15	J.MATSUKAWA 00.01.15	M.ISHIDA 00.01.17	Y.YOSHIMURA 00.01.17	

SCALE 5 : 1
UNITS mm

DRAWING NO. EDC3-152606

HRS HIROSE ELECTRIC CO.,LTD.

PART NO. FX11A-100P-SV

CODE NO. CL573-0543-7

1/1

FORM NO.229