Apr.1.2024 Copyright 2024 HIROSE ELECTRIC CO., LTD. All Rights Reserved.
In case of consideration for using Automotive equipment / device which demand high reliability, kindly contact our sales window correspondents.

	COUNT	DESCRIPTION OF REVISIONS	BY	CHKD	DATE		COUNT	DESCRIPTION OF REVISIONS	BY	CHKD	DATE
△					. .	△					. .
△					. .	△					. .
△					. .	△					. .

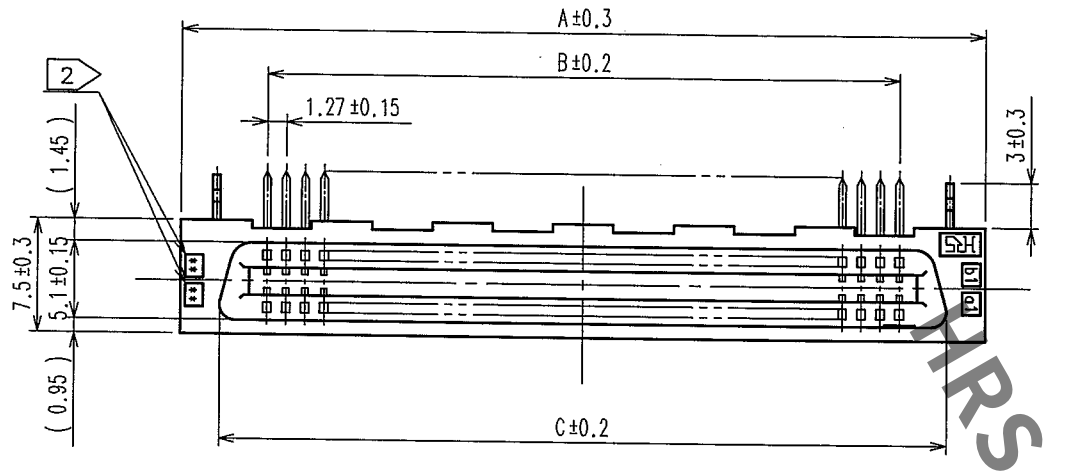

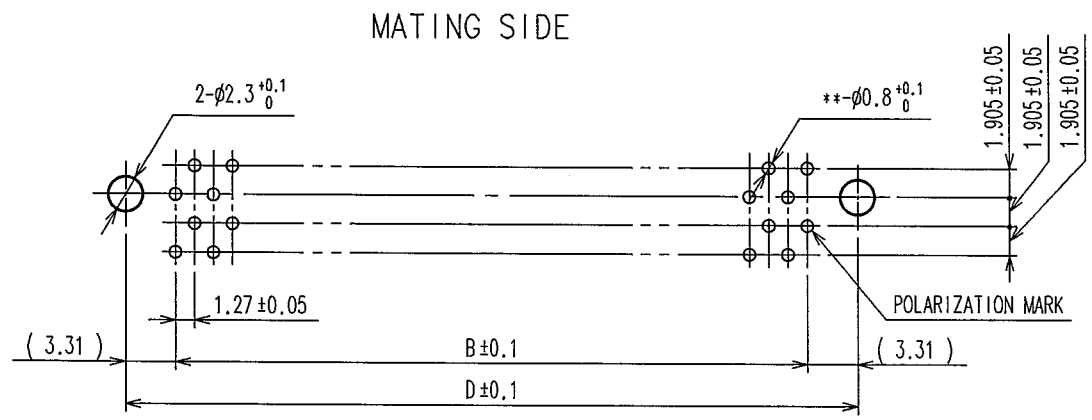

RECOMMENDED PC BOARD HOLE PATTERN (MOUNTING SIDE)

t=1.6

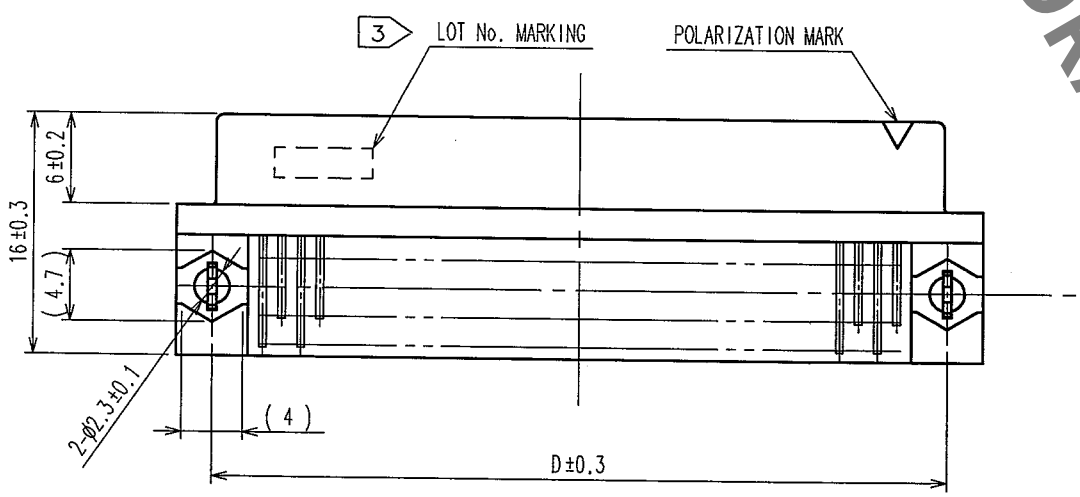

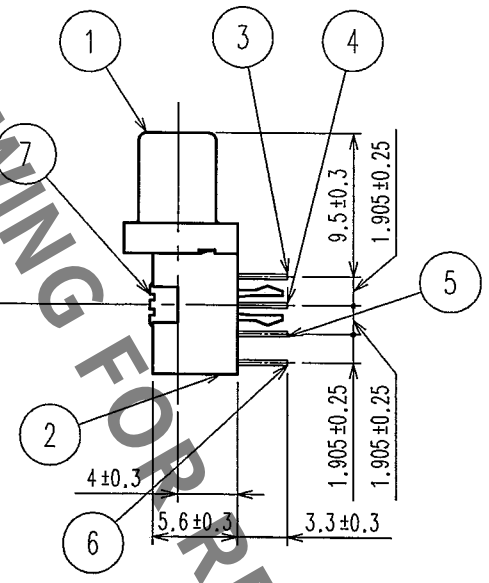

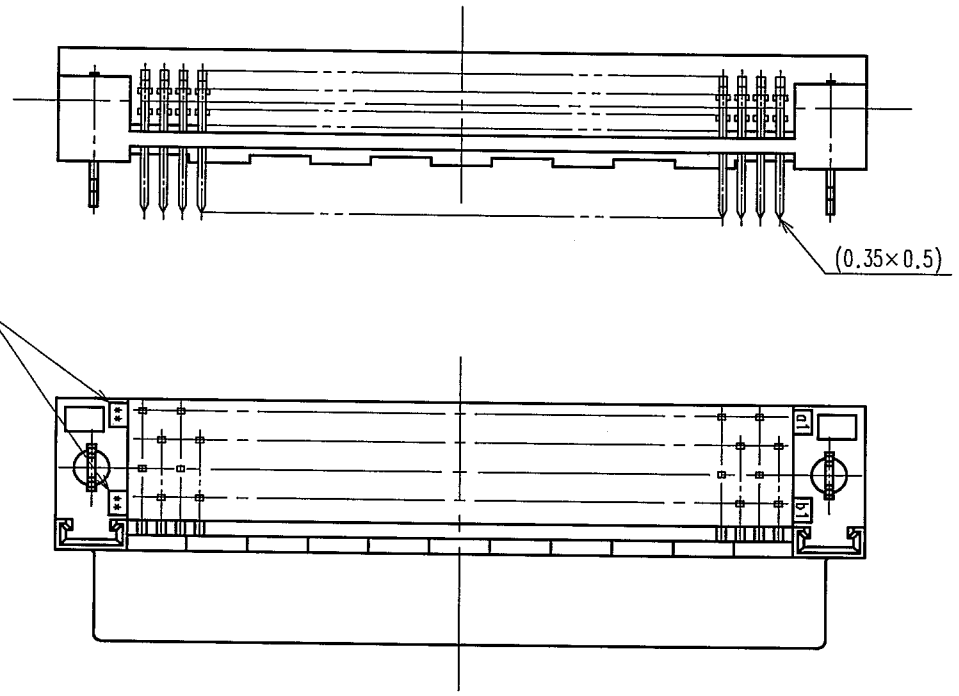

HRS No.	PART No.	1	A	B	C	D	2
CL572-2751-9-71	FX2-20S-1.27DSL(71)	20	22.75	11.43	17.63	18.05	10
CL572-2752-1-71	FX2-32S-1.27DSL(71)	32	30.37	19.05	25.25	25.67	16
CL572-2753-4-71	FX2-40S-1.27DSL(71)	40	35.45	24.13	30.33	30.75	20
CL572-2754-7-71	FX2-52S-1.27DSL(71)	52	43.07	31.75	37.95	38.37	26
CL572-2755-0-71	FX2-60S-1.27DSL(71)	60	48.15	36.83	43.03	43.45	30
CL572-2756-2-71	FX2-68S-1.27DSL(71)	68	53.23	41.91	48.11	48.53	34
CL572-2757-5-71	FX2-80S-1.27DSL(71)	80	60.85	49.53	55.73	56.15	40
CL572-2758-8-71	FX2-100S-1.27DSL(71)	100	73.55	62.23	68.43	68.85	50
CL572-2759-0-71	FX2-120S-1.27DSL(71)	120	86.25	74.93	81.13	81.55	60

NOTE
1 NUMBER OF PIN.
2 INDICATIONS.
3 SURFACE INDICATED LOT NO. SHALL BE OPTIONAL.
4 THE DIMENSIONS IN PARENTHESES ARE FOR REFERENCE.

NO.	MATERIAL	FINISH, REMARKS	NO.	MATERIAL	FINISH, REMARKS
7	PHOSPHOR BRONZE	TIN PLATED	3~6	PHOSPHOR BRONZE	CONTACT AREA:GOLD 0.2μm min
1,2	POLYAMIDE	BLACK UL94V-0			DIP AREA:TIN-PLATING 2μm min
					UNDER PLATING:NICKEL 2μm min

CODE NO.(OLD)	DRAWN	DESIGNED	CHECKED	APPROVED	RELEASED
	A.Suzukawa '05.03.25	K.Doi '05.03.25	H.Ogawa '05.03.25	H.Ogawa '05.03.25	. .

SCALE FREE
UNITS mm

DRAWING NO. EDC3-083296-21

HRS HIROSE ELECTRIC CO., LTD

PART NO. FX2-**S-1.27DSL(71)

CODE NO. CL572

1/1

TO
PCK

HRS DRAWING FOR REFERENCE