Apr.1.2024 Copyright 2024 HIROSE ELECTRIC CO., LTD. All Rights Reserved.
In case of consideration for using Automotive equipment / device which demand high reliability, kindly contact our sales window correspondents.

| | COUNT | DESCRIPTION OF REVISIONS | BY | CHKD | DATE | | COUNT | DESCRIPTION OF REVISIONS | BY | CHKD | DATE |
|---|---|---|---|---|---|---|---|---|---|---|---|
| △ | | | | | . . | △ | | | | | . . |
| △ | | | | | . . | △ | | | | | . . |
| △ | | | | | . . | △ | | | | | . . |

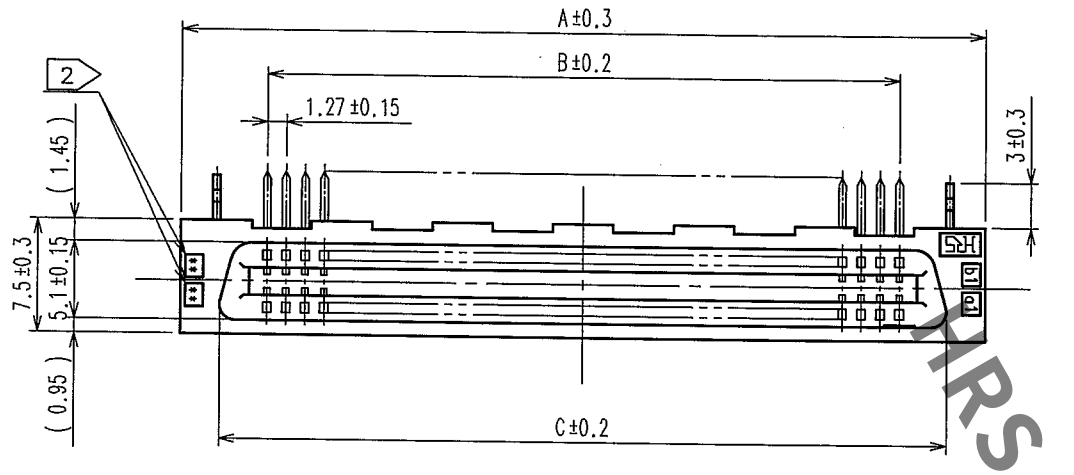


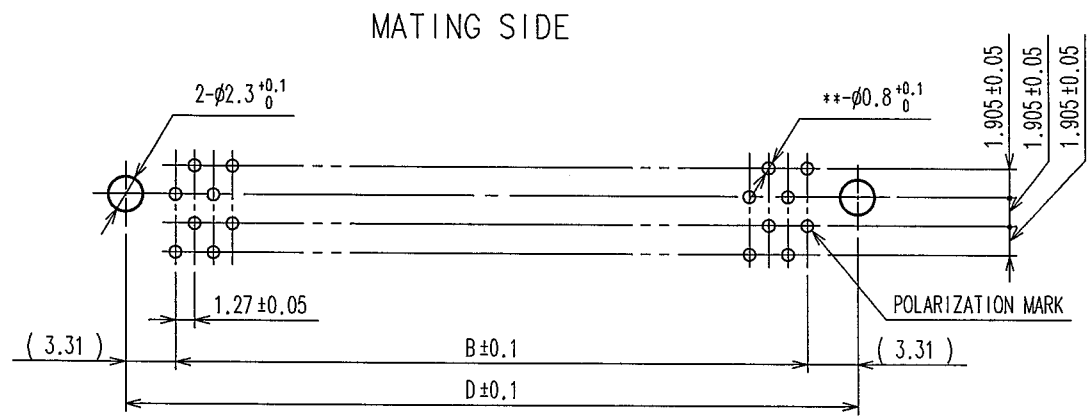


RECOMMENDED PC BOARD HOLE PATTERN (MOUNTING SIDE)

t=1.6

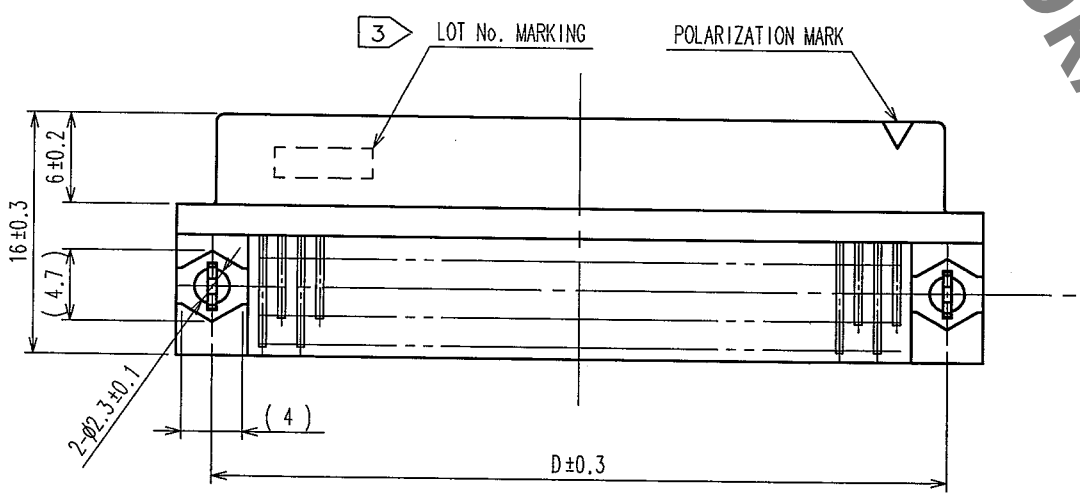


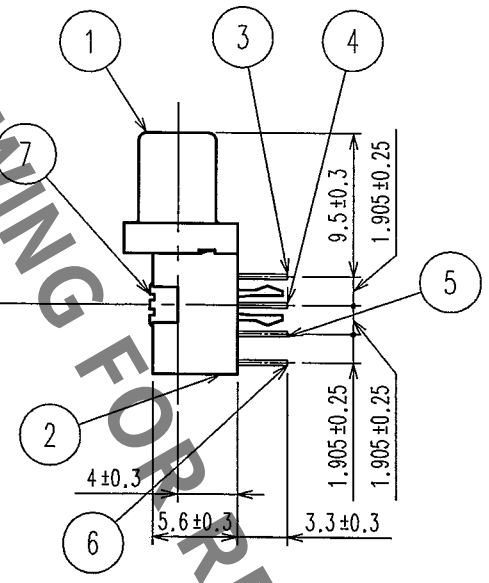


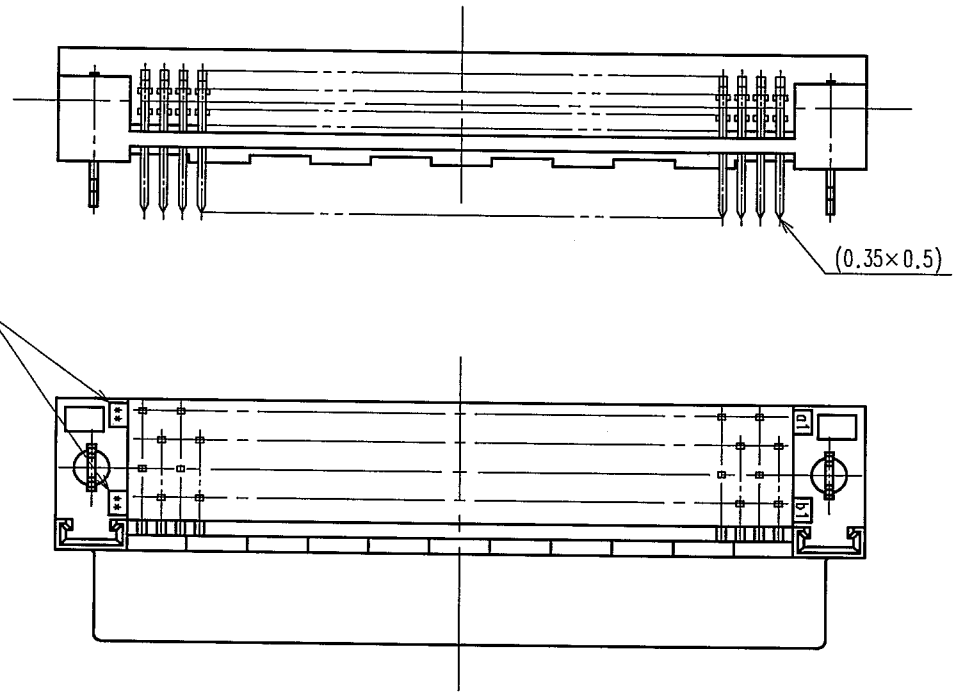


| HRS No. | PART No. | 1 | A | B | C | D | 2 |
|---|---|---|---|---|---|---|---|
| CL572-2751-9-71 | FX2-20S-1.27DSL(71) | 20 | 22.75 | 11.43 | 17.63 | 18.05 | 10 |
| CL572-2752-1-71 | FX2-32S-1.27DSL(71) | 32 | 30.37 | 19.05 | 25.25 | 25.67 | 16 |
| CL572-2753-4-71 | FX2-40S-1.27DSL(71) | 40 | 35.45 | 24.13 | 30.33 | 30.75 | 20 |
| CL572-2754-7-71 | FX2-52S-1.27DSL(71) | 52 | 43.07 | 31.75 | 37.95 | 38.37 | 26 |
| CL572-2755-0-71 | FX2-60S-1.27DSL(71) | 60 | 48.15 | 36.83 | 43.03 | 43.45 | 30 |
| CL572-2756-2-71 | FX2-68S-1.27DSL(71) | 68 | 53.23 | 41.91 | 48.11 | 48.53 | 34 |
| CL572-2757-5-71 | FX2-80S-1.27DSL(71) | 80 | 60.85 | 49.53 | 55.73 | 56.15 | 40 |
| CL572-2758-8-71 | FX2-100S-1.27DSL(71) | 100 | 73.55 | 62.23 | 68.43 | 68.85 | 50 |
| CL572-2759-0-71 | FX2-120S-1.27DSL(71) | 120 | 86.25 | 74.93 | 81.13 | 81.55 | 60 |

NOTE
1 NUMBER OF PIN.
2 INDICATIONS.
3 SURFACE INDICATED LOT NO. SHALL BE OPTIONAL.
4 THE DIMENSIONS IN PARENTHESES ARE FOR REFERENCE.

| NO. | MATERIAL | FINISH, REMARKS | NO. | MATERIAL | FINISH, REMARKS |
|---|---|---|---|---|---|
| 7 | PHOSPHOR BRONZE | TIN PLATED | 3~6 | PHOSPHOR BRONZE | CONTACT AREA:GOLD 0.2μm min |
| 1,2 | POLYAMIDE | BLACK UL94V-0 | | | DIP AREA:TIN-PLATING 2μm min |
| | | | | | UNDER PLATING:NICKEL 2μm min |

| CODE NO.(OLD) | DRAWN | DESIGNED | CHECKED | APPROVED | RELEASED |
|---|---|---|---|---|---|
| | A.Suzukawa '05.03.25 | K.Doi '05.03.25 | H.Ogawa '05.03.25 | H.Ogawa '05.03.25 | . . |

SCALE FREE
UNITS mm

DRAWING NO. EDC3-083296-21

HRS HIROSE ELECTRIC CO., LTD

PART NO. FX2-**S-1.27DSL(71)

CODE NO. CL572

1/1

| TO |
|---|
| PCK |
| |
| |
| |

HRS DRAWING FOR REFERENCE