Apr.1.2024 Copyright 2024 HIROSE ELECTRIC CO., LTD. All Rights Reserved.
In case of consideration for using Automotive equipment / device which demand high reliability, kindly contact our sales window correspondents.

	COUNT	DESCRIPTION OF REVISIONS	BY	CHKD	DATE		COUNT	DESCRIPTION OF REVISIONS	BY	CHKD	DATE
△					. .	△					. .
△					. .	△					. .
△					. .	△					. .

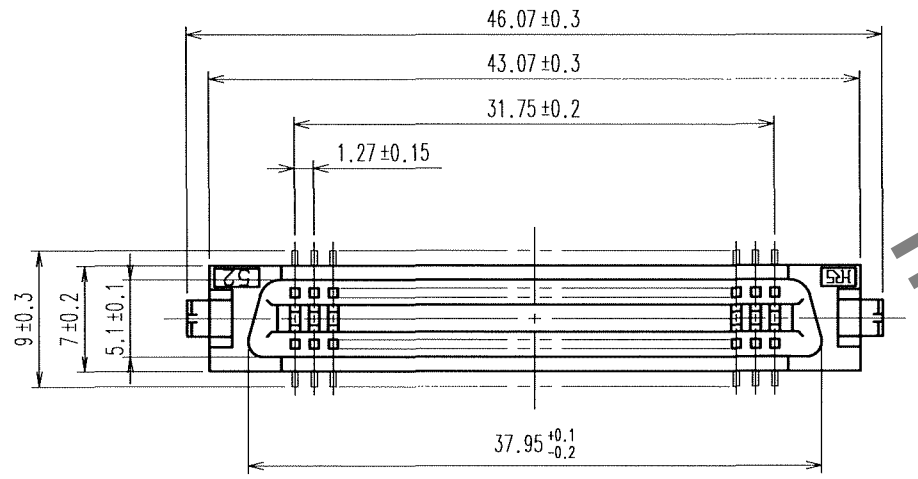

RECOMMENDED LAND PATTERN DIMENSION OF PCB (MOUNTING SIDE)

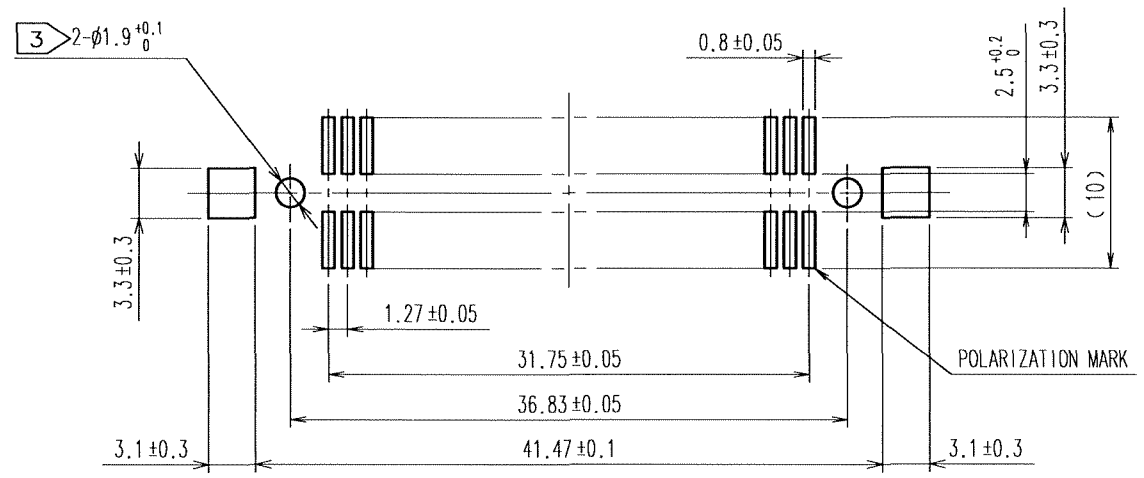

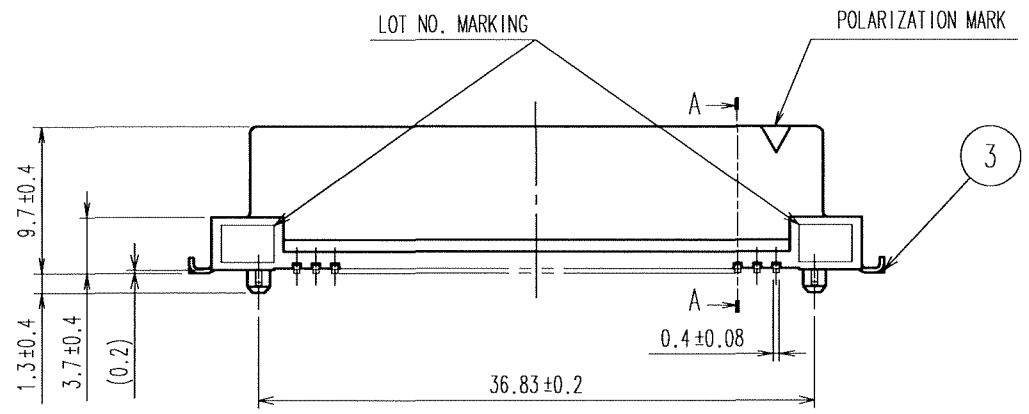

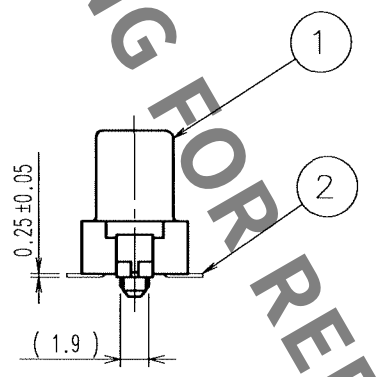

A–A

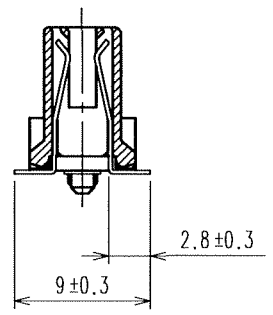

3 FIG.1(5 : 1)

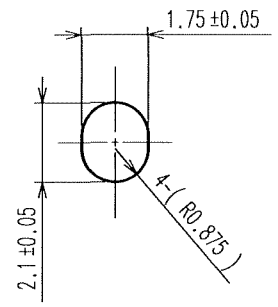

NOTES
1 LEAD CO-PLANARITY SHALL BE 0.15 MAX.
2 THE DIMENSIONS IN PARENTHESES ARE FOR REFERENCE.
3 IN CASE OF THE AUTOMATED MOUNTING, RECOMMENDED HOLE DIAMETER OF BOSS IS SHOWN IN FIG.1.

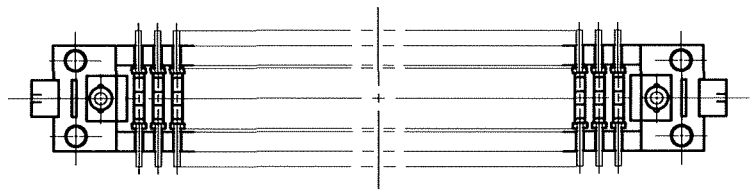

HRS DRAWING FOR REFERENCE

NO.	MATERIAL	FINISH, REMARKS	NO.	MATERIAL	FINISH, REMARKS
3	BRASS	TIN-PLATING	2	PHOSPHOR BRONZE	CONTACT AREA:GOLD 0.2μm min.
1	PPS	LIGHT BROWN (UL94V-0)			LEAD AREA:TIN-PLATING 2μm min.
					UNDER PLATING:NICKEL 1.5μm min.

CODE NO.(OLD)	DRAWN	DESIGNED	CHECKED	APPROVED	RELEASED
CL	A.SUZUKAWA 06.02.08	H.Nakamura 06.02.13	H.Ozawa '06.02.13	H.Okawa '06.02.13	. .

SCALE 2 : 1
UNITS mm

DRAWING NO. EDC3-082417-21

HRS HIROSE ELECTRIC CO., LTD

PART NO. FX2-52S-1.27SVL(71)

CODE NO. CL572-2154-0-71

1/1

TO
PCK