May.1.2024 Copyright 2024 HIROSE ELECTRIC CO., LTD. All Rights Reserved.
In case of consideration for using Automotive equipment / device which demand high reliability, kindly contact our sales window correspondents.

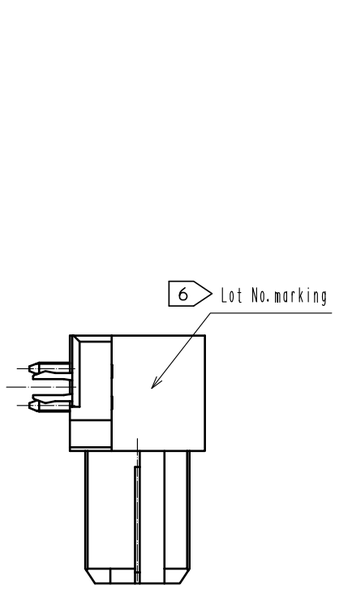

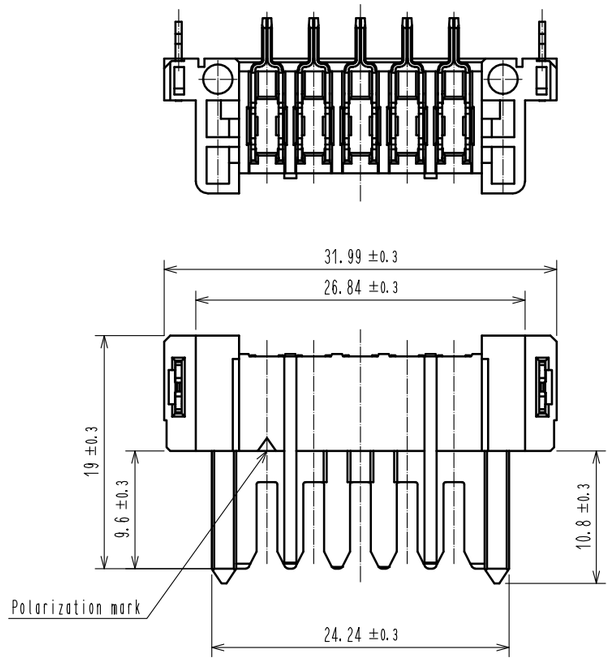

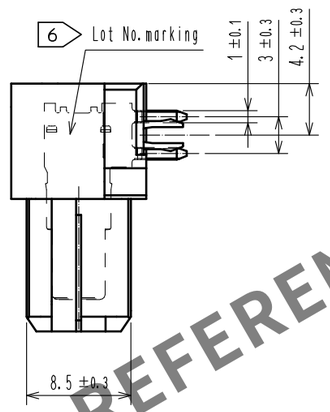

Cross section of mating(Free)
Vertical connection

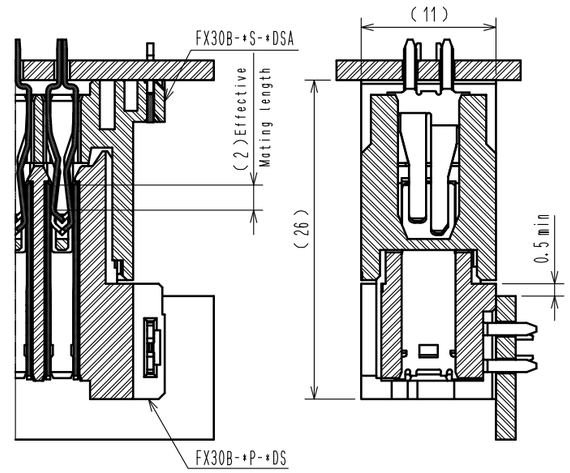

Cross section of mating(Free)
Coplanar connection

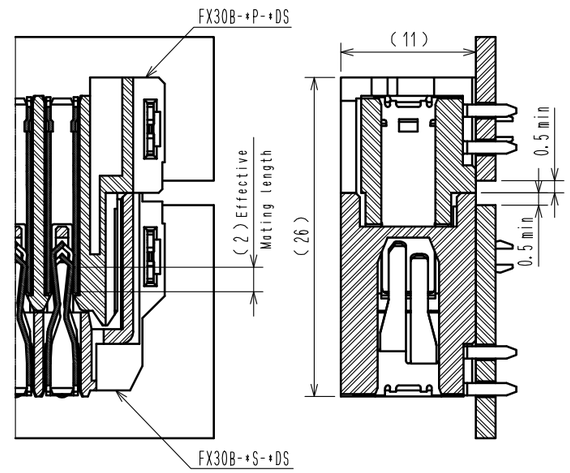

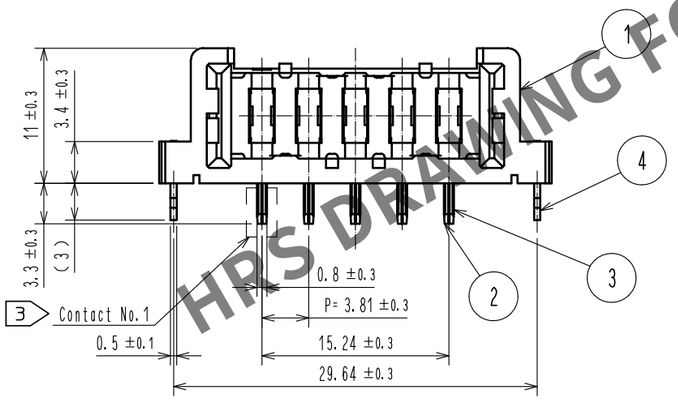

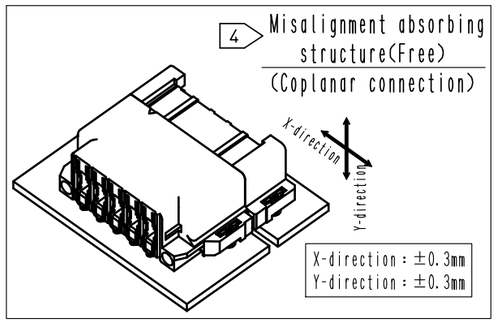

HRS DRAWING FOR REFERENCE

Note
1. This product is packaged in tray.(20pcs/tray)
2. Blemish and hit mark can be occured through out the manufacturing process whitch dosen't affect quality level. Also, black spot could be observed on the surface of housing.
3. For the contact No., adjacent two pairs of leads placed back-to-back (4 leads in total) compose one line.
4. Misalignment absorbing range:±0.3mm max.
5. The dimension in parentheses are for references.
6. Lot No. is indicated at either one of the position as shown.
7. Pay attention to the recommended PCB thickness and finished through-hole dimensions. Low retention force to PCB could induce angled mounting due to the unbalanced center of the connector.
8. UL(File No.E52653) C-UL(File No.E52653)

△1 △2 TUV(Certificate No.R50275872) authorization article.

NO.	MATERIAL	FINISH , REMARKS
2	COPPER ALLOY	CONTACT AREA:GOLD-PLATING 0.1μm LEAD AREA:TIN-PLATING 1.0μm UNDER PLATING:NICKEL 1.0μm
1	POLYAMIDE	BLACK UL94V-0

NO.	MATERIAL	FINISH , REMARKS
5	POLYSTYRENE	
4	PHOSPHOR BRONZE	TIN-PLATING 3.0μm UNDER PLATING:NICKEL 1.0μm
3	COPPER ALLOY	CONTACT AREA:GOLD-PLATING 0.1μm LEAD AREA:TIN-PLATING 1.0μm UNDER PLATING:NICKEL 1.0μm

UNITS	SCALE	COUNT	DESCRIPTION OF REVISIONS	DESIGNED	CHECKED	DATE
mm	2 : 1	△2 1	DIS-F-00006019	AK. IWAHORI	HT. YAMAGUCHI	20200406

HIROSE ELECTRIC CO., LTD.

APPROVED	: HS. OKAWA	20130313
CHECED	: KI. HIROKAWA	20130312
DESIGNED	: DK. AIMOTO	20130311
DRAWN	: DK. AIMOTO	20130311

DRAWING NO. EDC3-347271-00
PART NO. FX30B-5P-3.81DS
CODE NO. CL570-3403-5-00 △2 1/2

FORM HC0011-5-7_AN

May.1.2024 Copyright 2024 HIROSE ELECTRIC CO., LTD. All Rights Reserved.
In case of consideration for using Automotive equipment / device which demand high reliability, kindly contact our sales window correspondents.

Recommended hole pattern dimension of PCB(5:1)
(Connector mounting side, PCB thickness:t=1.6mm) 7

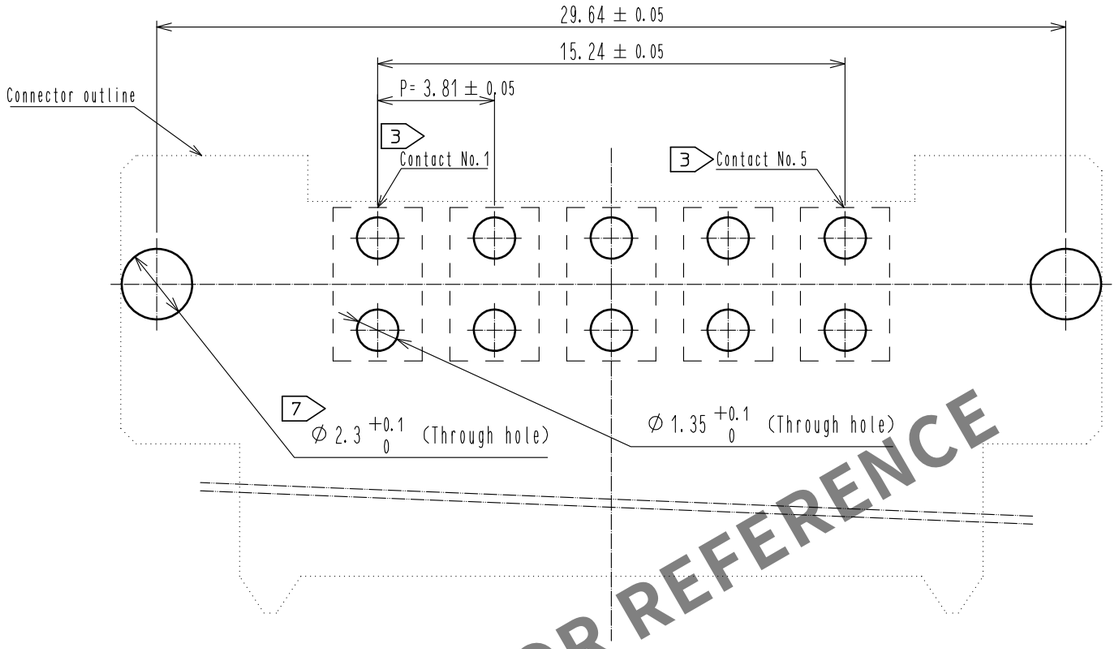

1 Drawing for packaging(1:2)

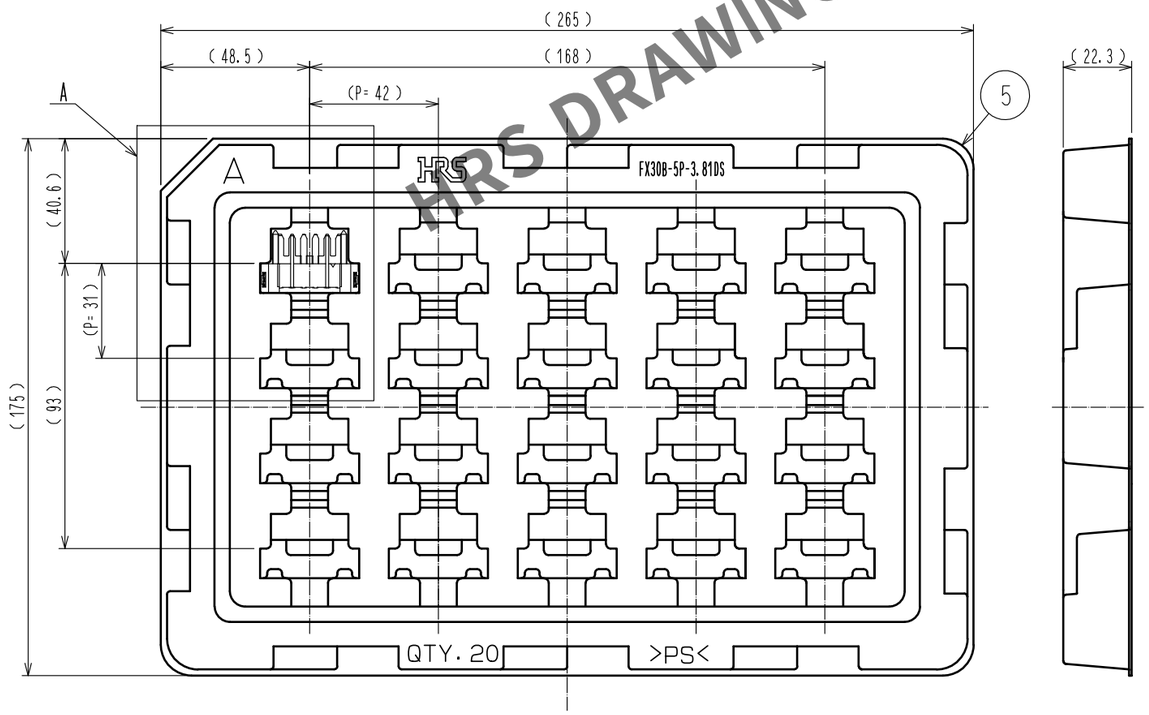

A(1:1)

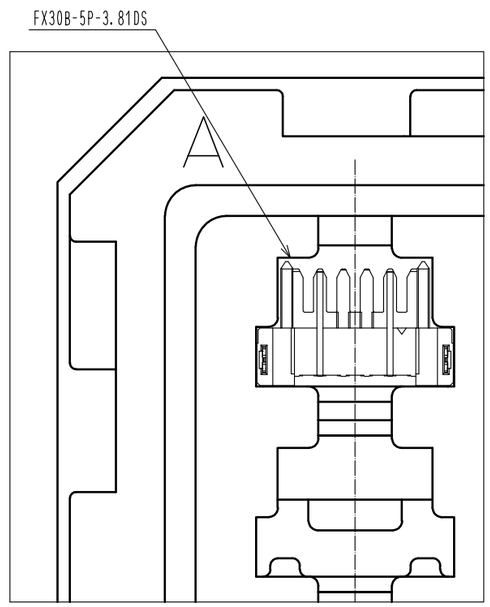

HRS DRAWING FOR REFERENCE

DRAWING NO.	EDC3-347271-00
PART NO.	FX30B-5P-3.81DS
CODE NO.	CL570-3403-5-00

2 2/2