Mar.1.2024 Copyright 2024 HIROSE ELECTRIC CO., LTD. All Rights Reserved.
In case of consideration for using Automotive equipment / device which demand high reliability, kindly contact our sales window correspondents.

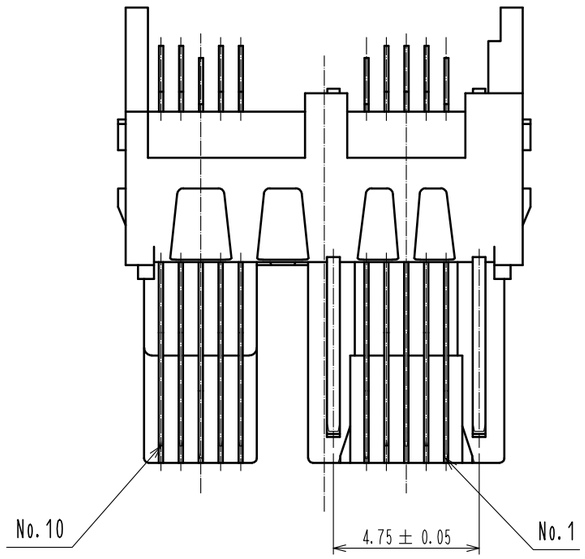

Fig-1 PACKING SPECIFICATION -IN THE CASE OF 2000 pcs-(FREE)

1. PLACE THE CONNECTOR UNIT INTO THE TRAY.
(100 pcs per tray)

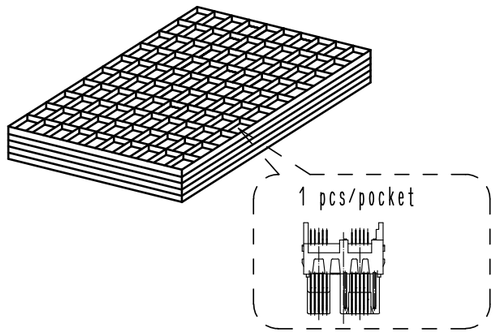

2. BIND THE TRAYS WITH CONNECTOR UNITS AS SHOWN BELOW.

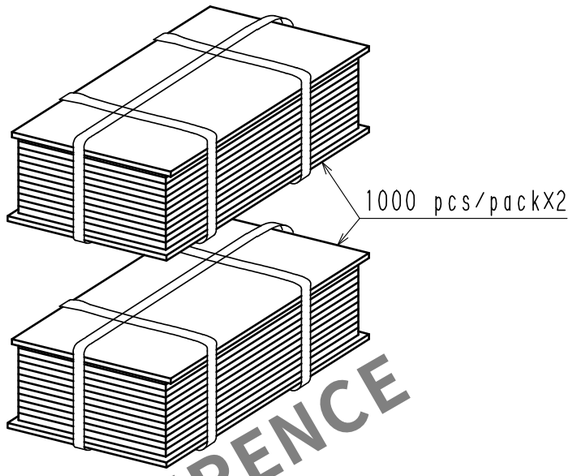

3. SET THE TRAYS INSIDE THE CARDBOARD BOX.

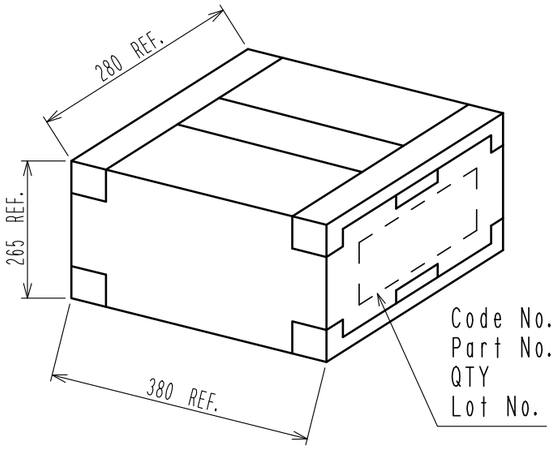

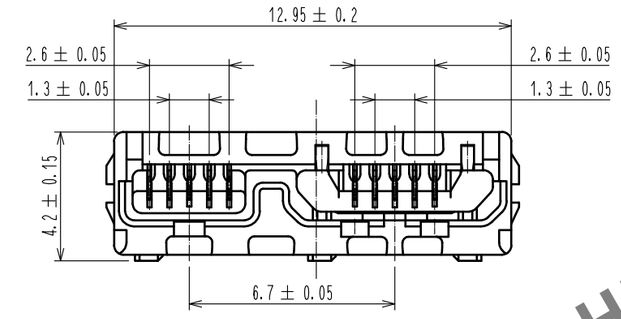

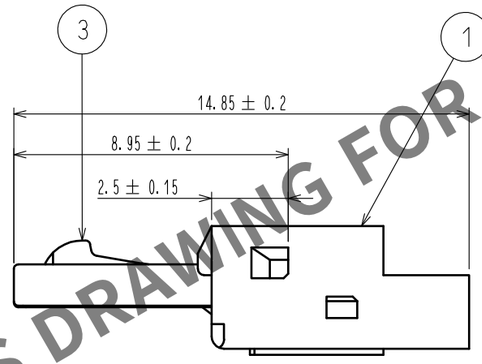

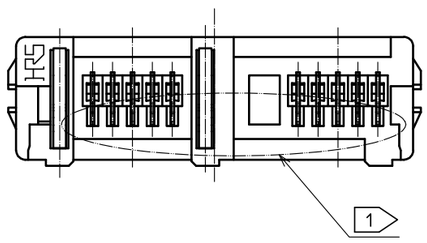

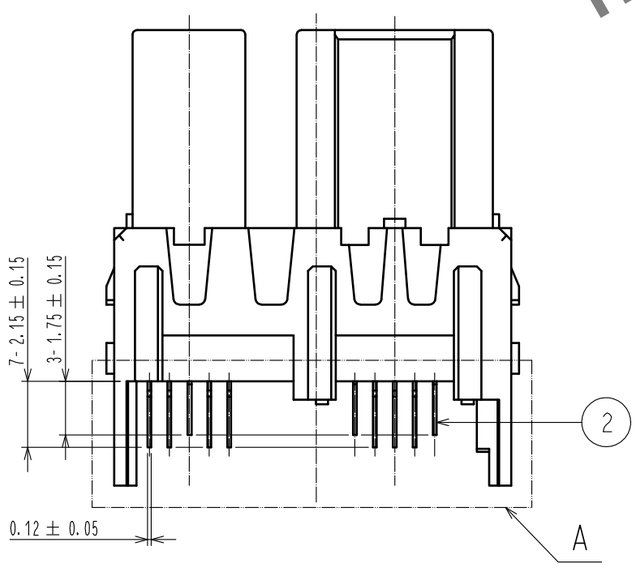

A. Location

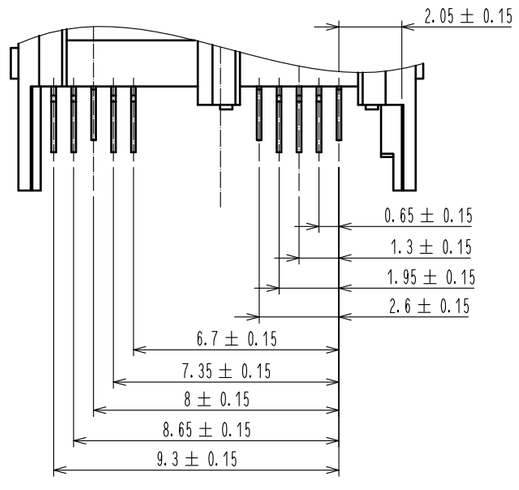

HRS DRAWING FOR REFERENCE

△1
Halogen-Free
Lead Free Process
RoHS Compliant

NO.	MATERIAL	FINISH , REMARKS	NO.	MATERIAL	FINISH , REMARKS
2	COPPER ALLOY	CONTACT AREA:GOLD PLATING 0.75μm min MOUNTING AREA:TIN PLATING 1μm min UNDER PLATING:NICKEL PLATING 2μm min			
1	LCP	UL94V-0 , BLACK	3	STAINLESS STEEL	

UNITS	SCALE		COUNT	DESCRIPTION OF REVISIONS	DESIGNED	CHECKED	DATE
mm	5 : 1	△1	1	DIS-E-00001801	YS. SAKODA	AH. KODAMA	20181004

HIROSE ELECTRIC CO., LTD.

APPROVED	NM. NISHIMATSU	20151027	DRAWING NO. EDC-127029-30-00
CHECKED	KN. ICHIKAWA	20151027	PART NO. ZX360-B-10S-UNIT(30)
DESIGNED	TS. ITO	20151027	
DRAWN	AK. AKIYAMA	20151027	CODE NO. CL242-0501-4-30 △1 1/3

Mar.1.2024 Copyright 2024 HIROSE ELECTRIC CO., LTD. All Rights Reserved.
In case of consideration for using Automotive equipment / device which demand high reliability, kindly contact our sales window correspondents.

Fig-2. CONNECTOR MOUNTED ON PCB

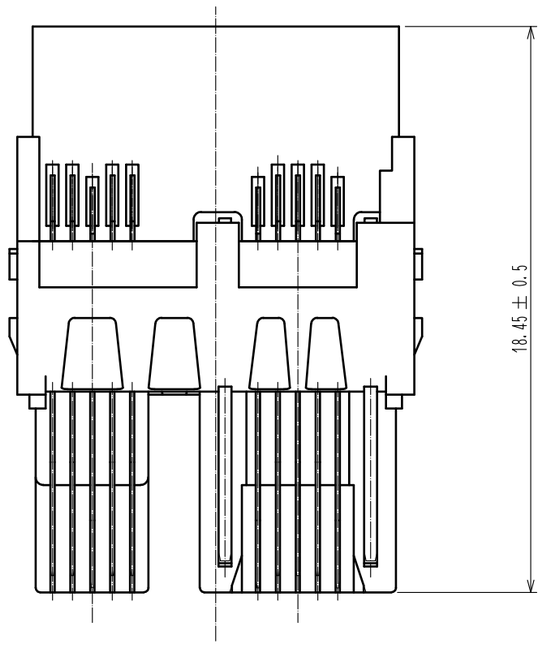

PCB LAYOUT FOR REFERENCE

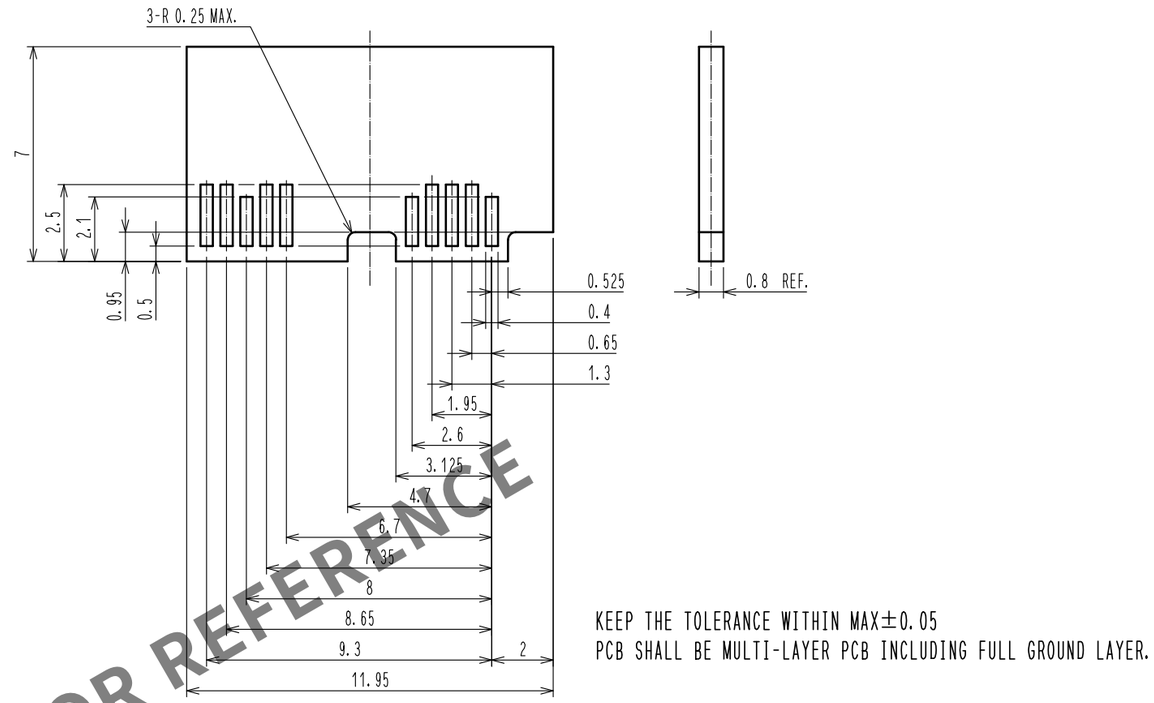

KEEP THE TOLERANCE WITHIN MAX±0.05
PCB SHALL BE MULTI-LAYER PCB INCLUDING FULL GROUND LAYER.

HRS DRAWING FOR REFERENCE

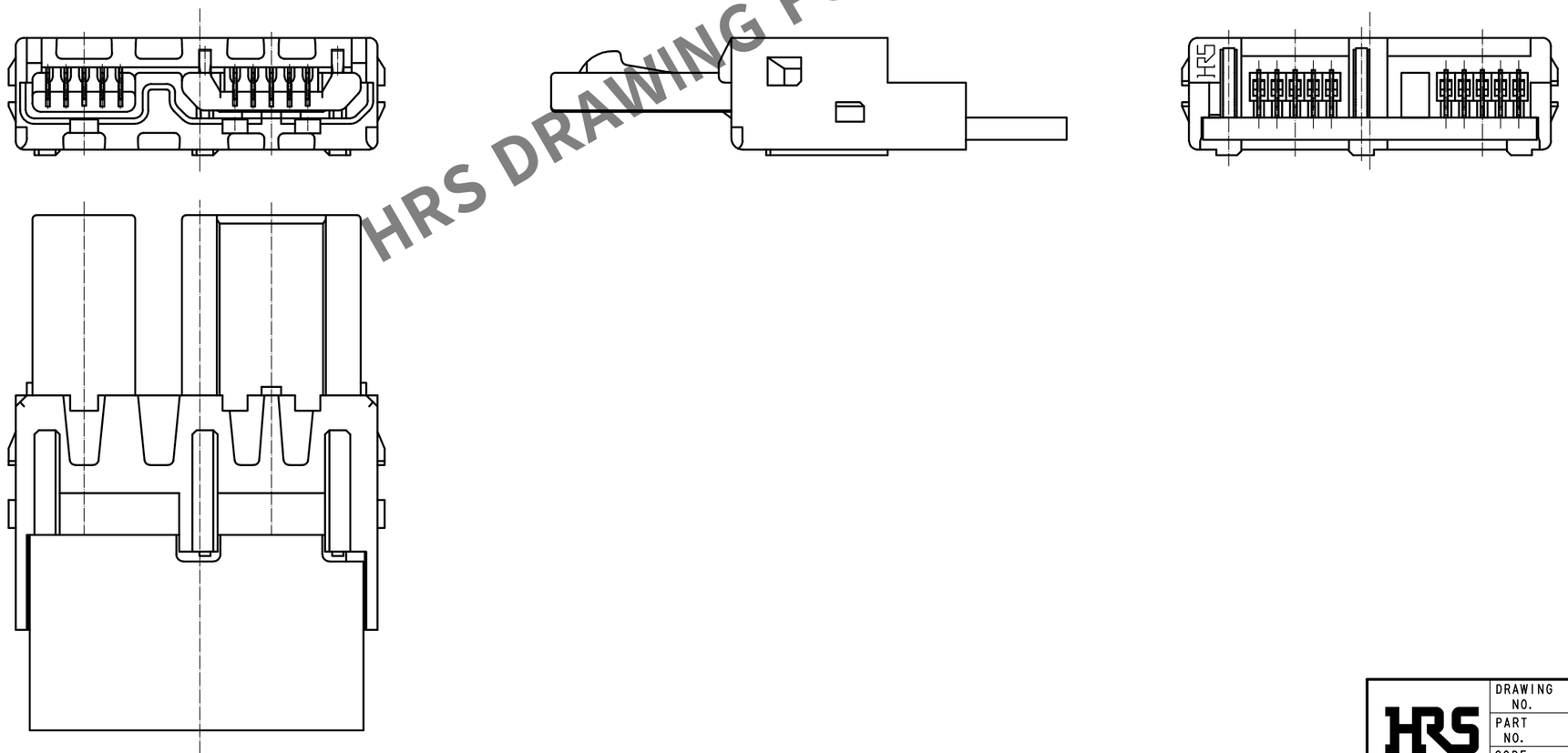

DRAWING NO.	EDC-127029-30-00
PART NO.	ZX360-B-10S-UNIT(30)
CODE NO.	CL242-0501-4-30

Mar.1.2024 Copyright 2024 HIROSE ELECTRIC CO., LTD. All Rights Reserved.
In case of consideration for using Automotive equipment / device which demand high reliability, kindly contact our sales window correspondents.

Fig-3 SHIELDING-PLATE ASSEMBLY

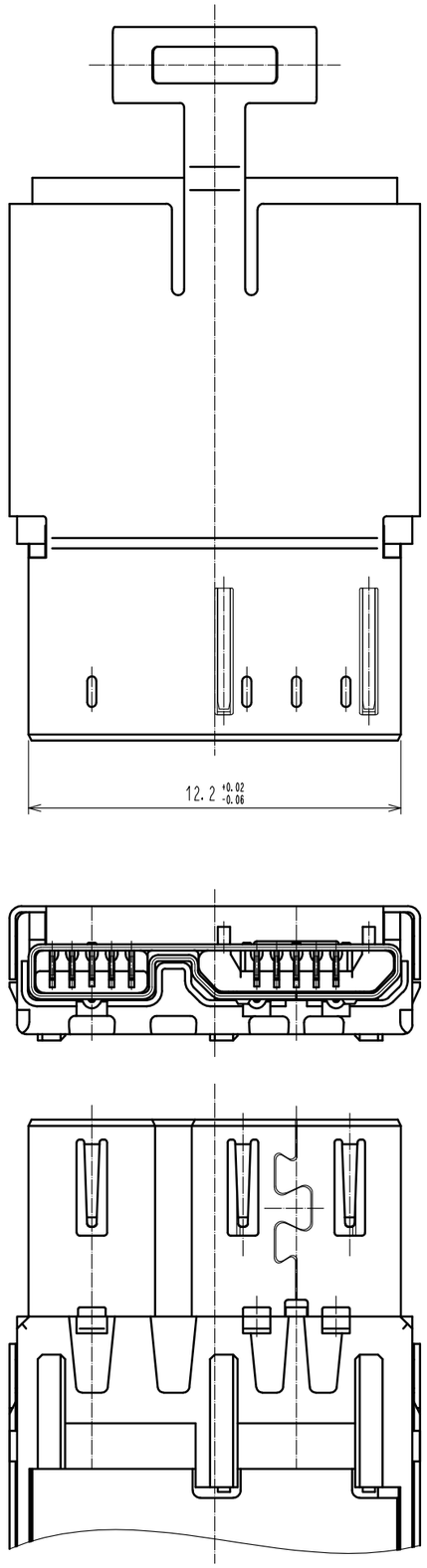

OVER-MOLDING (REFERENCE) (FREE)

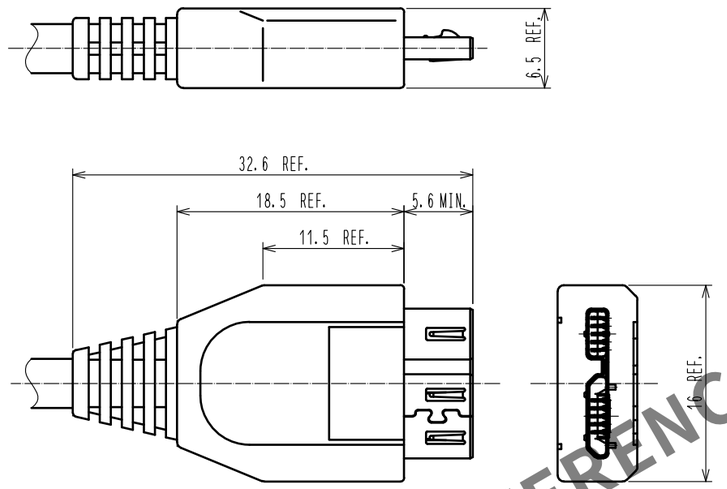

3 ZX360-B-SLDA(SOLD SEPARATELY)

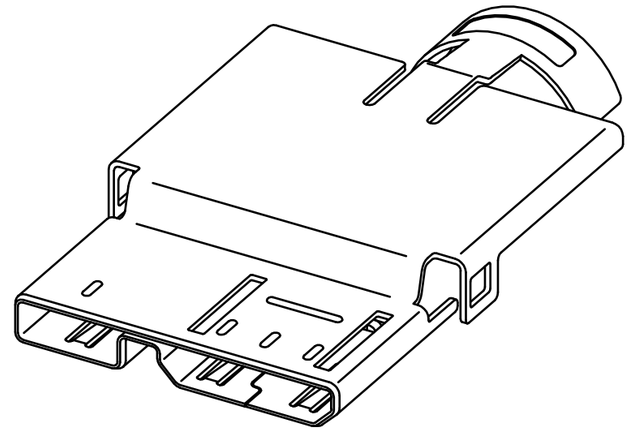

Fig-4 MATED WITH CORRESPONDING PLUG

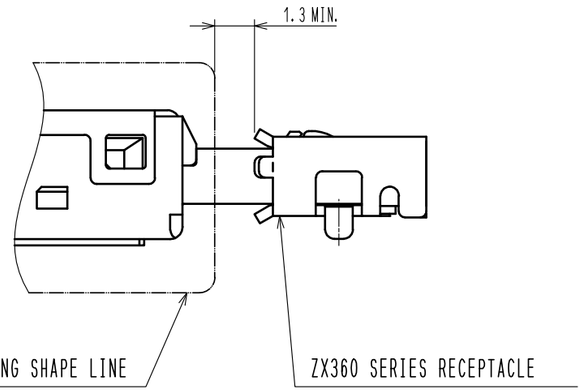

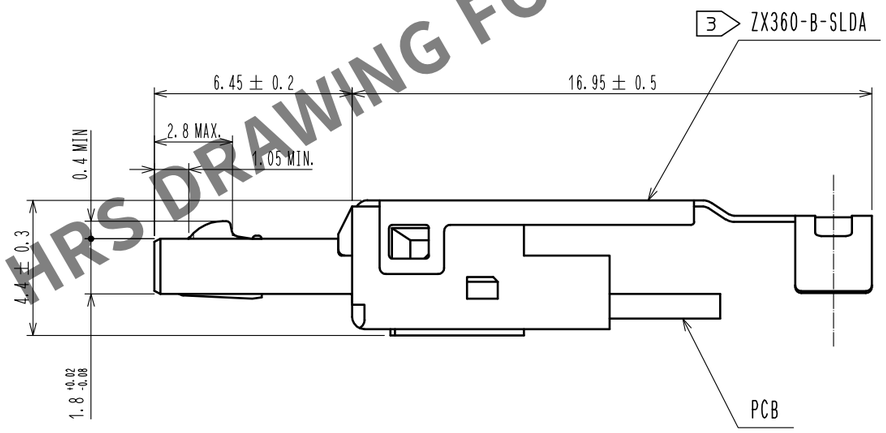

HRS DRAWING FOR REFERENCE

HRS	DRAWING NO.	EDC-127029-30-00
	PART NO.	ZX360-B-10S-UNIT(30)
	CODE NO.	CL242-0501-4-30

1 3/3

FORM HC0011-5-8