May.1.2024 Copyright 2024 HIROSE ELECTRIC CO., LTD. All Rights Reserved.
In case of consideration for using Automotive equipment / device which demand high reliability, kindly contact our sales window correspondents.

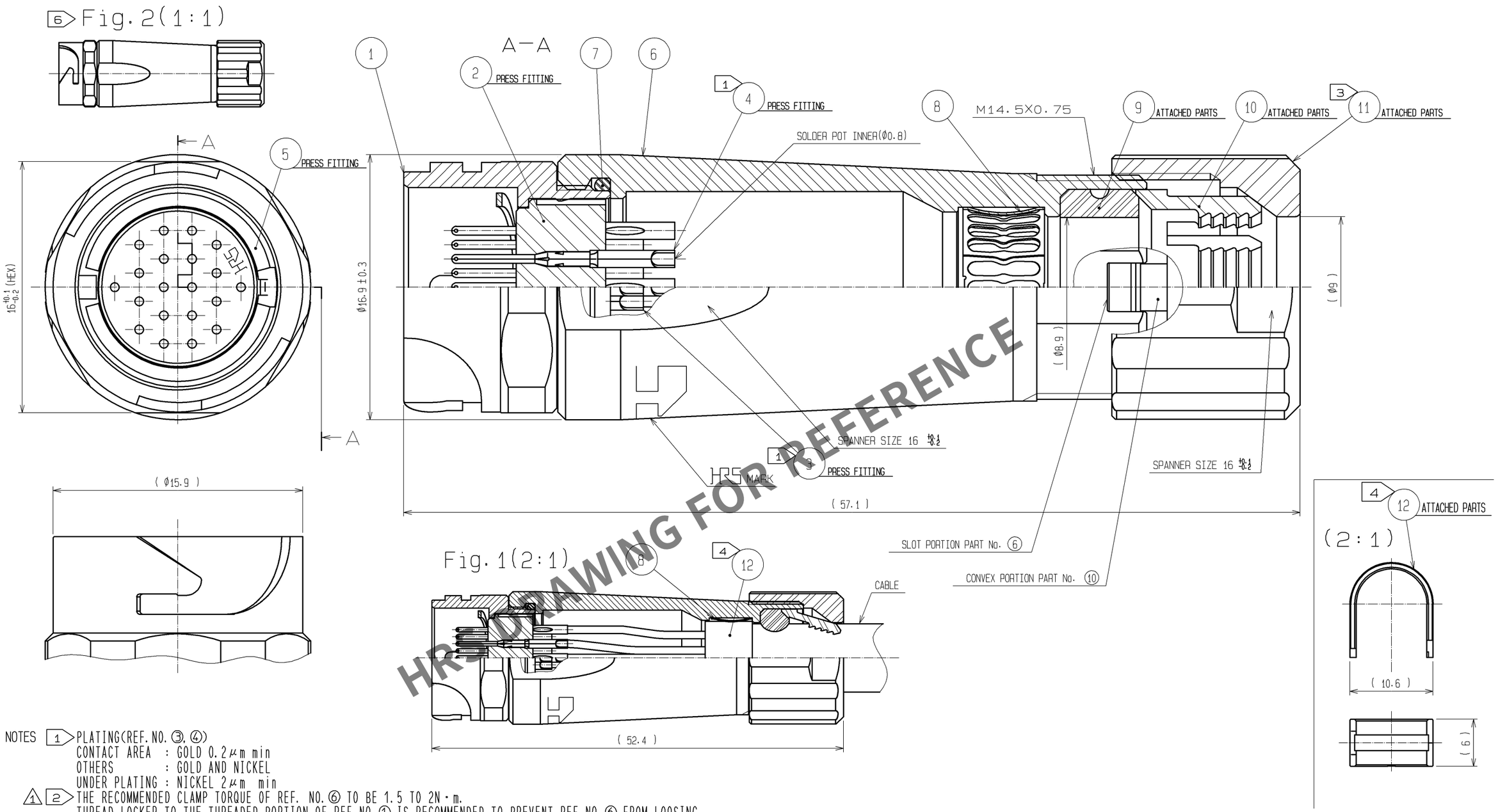

HRS DRAWING FOR REFERENCE

NOTES 1 PLATING(REF. NO. ③, ④)
CONTACT AREA : GOLD 0.2μm min
OTHERS : GOLD AND NICKEL
UNDER PLATING : NICKEL 2μm min

1 2 THE RECOMMENDED CLAMP TORQUE OF REF. NO. ⑥ TO BE 1.5 TO 2N・m.
THREAD LOCKER TO THE THREADED PORTION OF REF. NO. ① IS RECOMMENDED TO PREVENT REF. NO. ⑥ FROM LOOSING.
RECOMMENDED THREAD LOCKER:LOCTITE 271, HENKEL JAPAN LTD.

2 3 THE RECOMMENDED CLAMP TORQUE OF REF. NO. ⑪ TO BE 1 TO 1.5N・m.
THREAD LOCKER AND LOCK PRIMER TO THE THREADED PORTION M14.5×0.75 OF REF. NO. ⑥ IS RECOMMENDED TO PREVENT REF. NO. ⑪ FROM LOOSING.
RECOMMENDED THREAD LOCKER AND LOCK PRIMER : LOCTITE 271, LOCK PRIMER 7649, HENKEL JAPAN LTD.

4 FASTEN REF. NO. ⑫ TO THE CABLE WITH THE CABLE CRIMPING TOOL.
AND MAKE REF. NO. ⑫ CONTACT WITH REF. NO. ⑧(REFER TO Fig.1).
REFER TO THE TECHNICAL SPECIFICATION ATAD-C0099 FOR DETAILS.
APPLICABLE CABLE CRIMPING TOOL : LF-TC-01 (CL150-0234-6)

5 APPLICABLE CABLE ASSEMBLY FIXTURE : LF13BJ-T01 (CL150-0238-7)
CABLE ASSEMBLY FIXTURE IS USED AS A RECEPTACLE STAND OF EXTRACT AND THE PART NUMBER ① OF AN ASSEMBLY.

6 Fig.2 SHOWS THE APPEARANCE AFTER ASSEMBLY.

7 ROTATION EXAMPLES OF REF. NO. ⑥ AND ⑪ TO ① ARE SHOWN.

NO.	MATERIAL	FINISH, REMARKS	NO.	MATERIAL	FINISH, REMARKS
6	ZINC ALLOY	NICKEL PLATING	12	BRASS	NICKEL PLATING
5	PHOSPHOR BRONZE	NICKEL PLATING	11	PPS	(NATURAL, BROWN) UL94V-0
4	COPPER ALLOY	1	10	POLYAMIDE	(NATURAL, MILKY WHITE) UL94V-0
3	COPPER ALLOY	1	9	CHLOROPRENE RUBBER	(BLACK)
2	PPS	(BLACK) UL94V-0	8	PHOSPHOR BRONZE	NICKEL PLATING
1	ZINC ALLOY	NICKEL PLATING	7	CHLOROPRENE RUBBER	(BLACK)

UNITS	SCALE	COUNT	DESCRIPTION OF REVISIONS	DESIGNED	CHECKED	DATE
mm	4 : 1	2 1	DIS-C-001469	TY. SUZUKI	HY. KISHI	09.11.09

HRS HIROSE ELECTRIC CO., LTD.

APPROVED	: MR. YOSHIDA	05.01.05
CHECKED	: MO. SATOH	05.01.05
DESIGNED	: YH. YAMADA	05.01.05
DRAWN	: YH. YAMADA	05.01.05

DRAWING NO. EDC3-114402-00
PART NO. LF13WBJ-20P
CODE NO. CL136-2009-4-00
2 1/1

FORM HC0011-5-7