May.1.2024 Copyright 2024 HIROSE ELECTRIC CO., LTD. All Rights Reserved.
In case of consideration for using Automotive equipment / device which demand high reliability, kindly contact our sales window correspondents.

	COUNT	DESCRIPTION OF REVISIONS	BY	CHKD	DATE		COUNT	DESCRIPTION OF REVISIONS	BY	CHKD	DATE
△					. .	△					. .
△					. .	△					. .
△					. .	△					. .

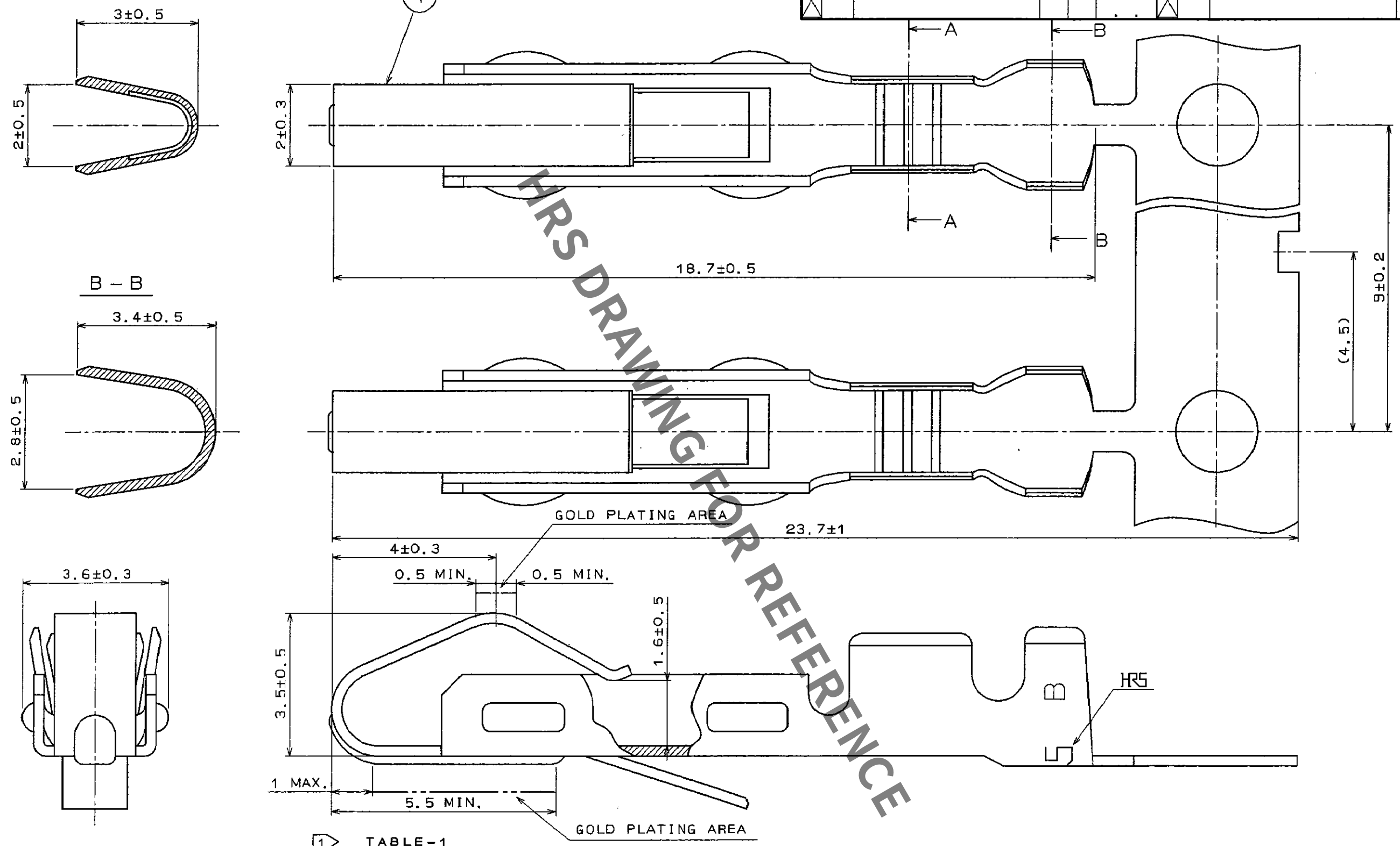

HRS DRAWING FOR REFERENCE

1 TABLE-1

	WIRE SIZE	SAFETY STANDARD		
		UL	CSA	TÜV
CURRENT RATING	AWG#18	3A	3A	5A
	AWG#20		2A	2.5A
	AWG#22		1A	1A
	AWG#24			

NOTE 1 APPLICABLE WIRE SIZE AND CURRENT RATING ARE AS PER TABLE-1

NO.	MATERIAL	FINISH , REMARKS	NO.	MATERIAL	FINISH , REMARKS
1	PHOSPHOR BRONZE	SELECTIVE GOLD PLATING OVER NICKEL PLATING			

CODE NO. (OLD)	DRAWN	DESIGNED	CHECKED	APPROVED	RELEASED
	J. Watanabe '95.8.3	J. Watanabe '95.8.3	H. Miura 95.8.3	S. Watanabe 95.8.4	

SCALE 10:1
UNITS mm

DRAWING NO. EDC3-08309-04

PART NO. QR/P-XC-221(12)

HRS HIROSE ELECTRIC CO., LTD.

CODE NO. CL221-0012-7-12

1/1

FORM No. 229

TO
Q2