May.1.2024 Copyright 2024 HIROSE ELECTRIC CO., LTD. All Rights Reserved.
In case of consideration for using Automotive equipment / device which demand high reliability, kindly contact our sales window correspondents.

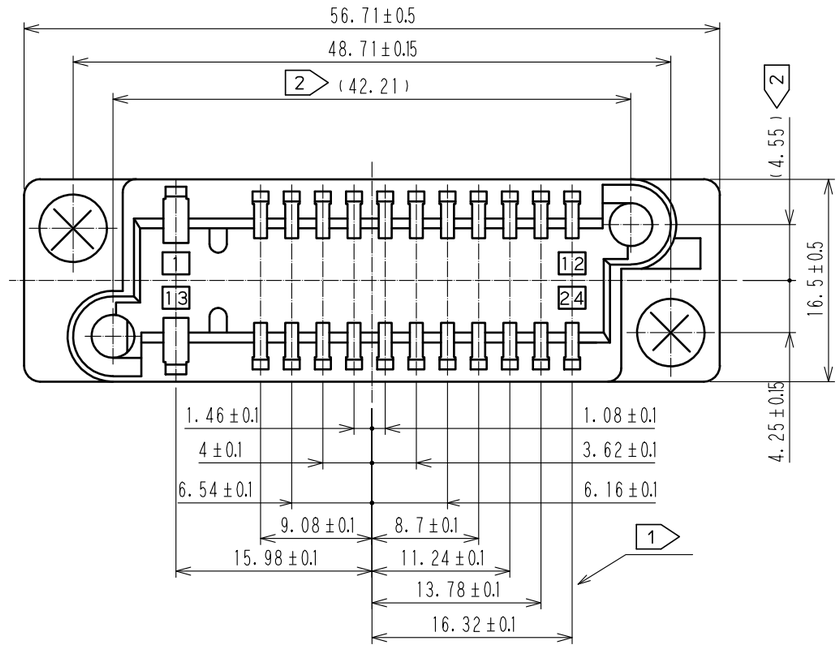

3 Table-1

	Contact name	AWG#	UL	CSA	TÜV	Contact No.
Operating temperature range			-10 ~ +60℃			
Rated voltage			AC250V		AC250V AC125V	1, 13 2~12, 14~24
Rated current	QR/P1-SC1B-※21	#14	10A	10A	10A	1, 13
		#16		8A		
	QR/P1-SC1A-※11	#18	5A	5A	5A	
		#20	3A	3A	2.5A	
		#22~#24			1A	
	QR/P1-SC2A-※11	#24	1A	2A	1A	2~12, 14~24
		#26		1A		
		#28				

※:1 is a loose piece contact
※:2 is a strip contact

< Reference panel cutout >

Rear Mounting
(Connector mounted on the back of the panel)

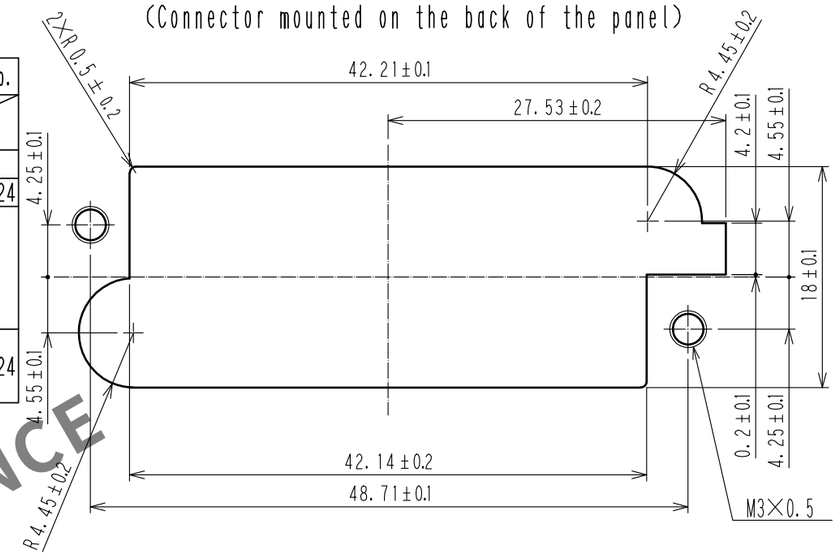

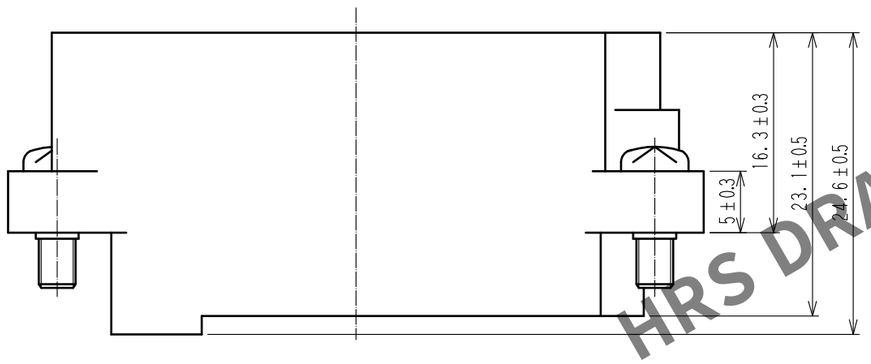

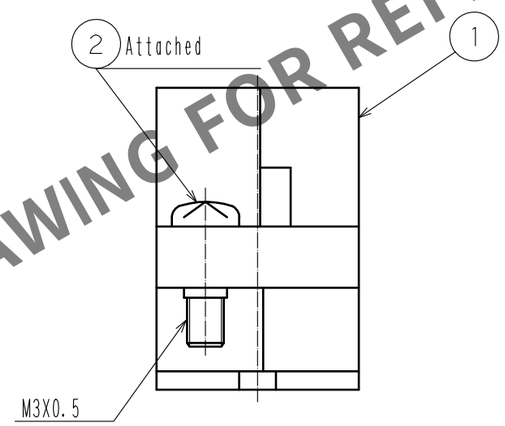

Front Mounting
(Connector mounted on the face of the panel)

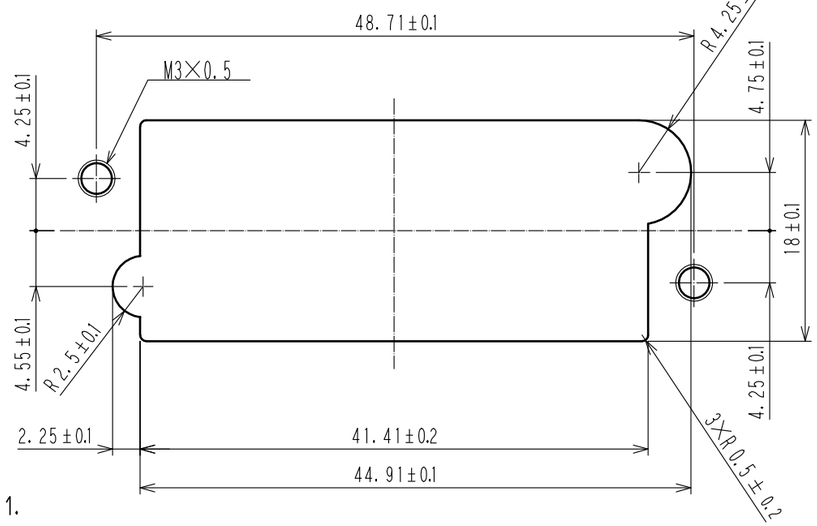

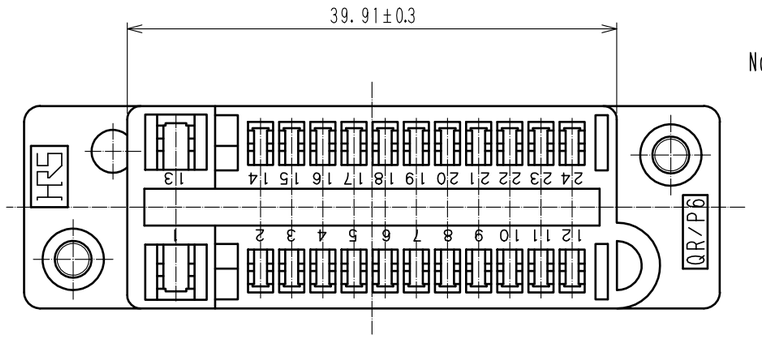

Notes
1. The dimensional tolerance of each contact hole position to be ±0.1.
2. The dimensions in parentheses are for reference.
3. Operating temperature range, rated voltage and rated current are per Table-1.
4. Directions for use.
   (1) Please do not use for the purpose of interrupting the current.
   (2) Please use inside the enclosure or equipment.
5. Over : Nickel plating 0.8μm
   Under : Copper plating 2μm

NO.	MATERIAL	FINISH , REMARKS	NO.	MATERIAL	FINISH , REMARKS
1	PBT	Black , UL94V-0	2	Steel	5 Shoulder screw M3X0.5X10

UNITS	SCALE	COUNT	DESCRIPTION OF REVISIONS	DESIGNED	CHECKED	DATE
mm	2 : 1	0				

HIROSE ELECTRIC CO., LTD.

APPROVED	: TU. TANIGUCHI	20181205	DRAWING NO.	EDC-042997-21-00
CHECKED	: TU. TANIGUCHI	20181205	PART NO.	QR/P6-24S-C(21)
DESIGNED	: TS. ITO	20181205		
DRAWN	: SJ. SATO	20181204	CODE NO.	CL221-0210-0-21

0 1/1

HRS DRAWING FOR REFERENCE