Apr.1.2024 Copyright 2024 HIROSE ELECTRIC CO., LTD. All Rights Reserved.
In case of consideration for using Automotive equipment / device which demand high reliability, kindly contact our sales window correspondents.

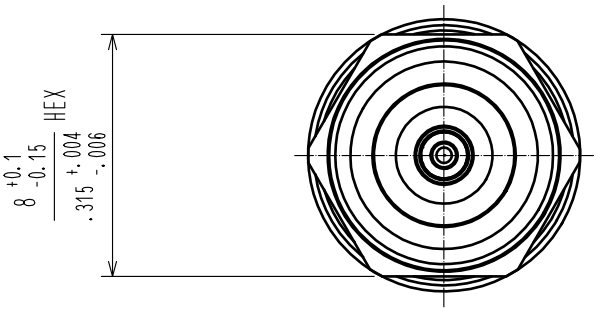

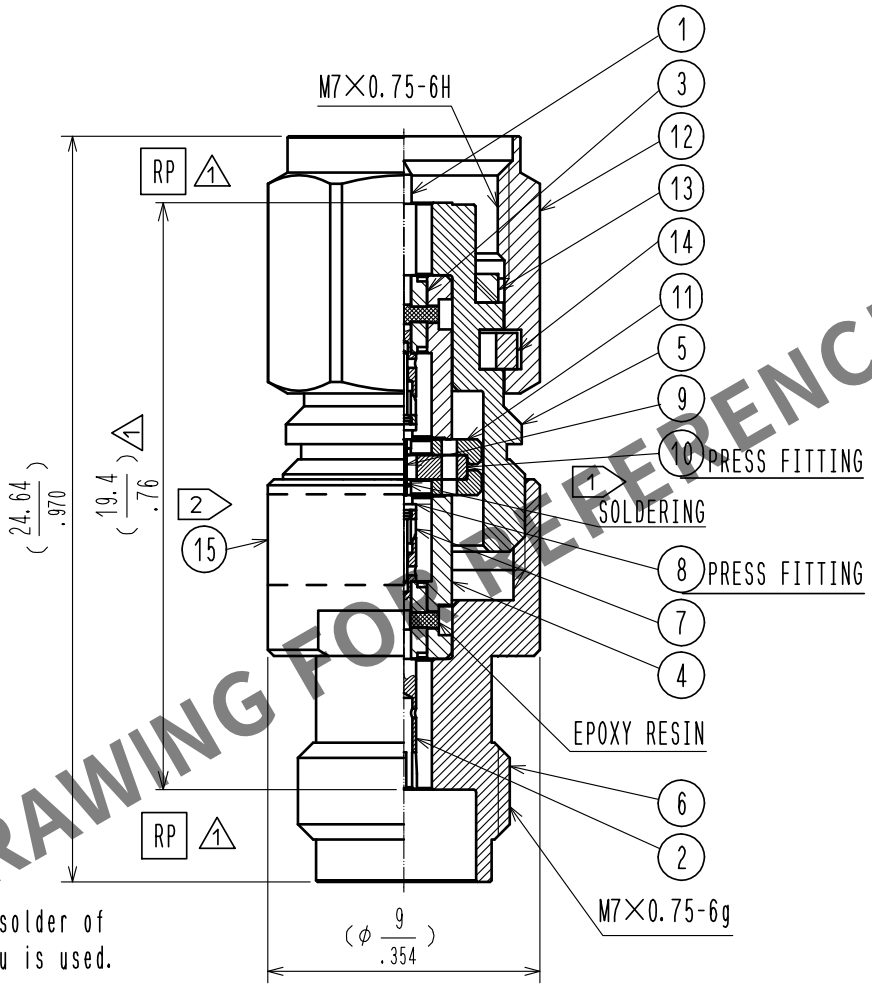

HRS DRAWING FOR REFERENCE

NOTE 1 Lead-free solder of Sn3Ag0.5Cu is used.

2 Marking of label.
1. Part No. HV-AT(4)-PJ
2. Production No.
3. Manufacturer abbreviation.

NO.	MATERIAL	FINISH . REMARKS	NO.	MATERIAL	FINISH . REMARKS
8	BRASS	GOLD PLATING			
7	BERYLLIUM COPPER	GOLD PLATING	15		LABEL
6	STAINLESS STEEL	PASSIVATE	14	BERYLLIUM COPPER	NICKEL PLATING
5	STAINLESS STEEL	PASSIVATE	13	SILICON RUBBER	
4	STAINLESS STEEL	GOLD PLATING	12	STAINLESS STEEL	PASSIVATE
3	PTFE		11	ALUMINIUM	
2	BERYLLIUM COPPER	GOLD PLATING	10	BRASS	GOLD PLATING
1	BRASS	GOLD PLATING	9	ALUMINA	

UNITS	SCALE		COUNT	DESCRIPTION OF REVISIONS	DESIGNED	CHECKED	DATE
mm	4 : 1	1	3	DIS-D-00004617	HA. NISHIMURA	NK. NINOMIYA	20191225

HIROSE ELECTRIC CO., LTD.

APPROVED	KH. IKEDA	20180324
CHECKED	TS. NOBE	20180323
DESIGNED	HA. NISHIMURA	20180322
DRAWN	HA. NISHIMURA	20180322

DRAWING NO. EDC-382325-00-00
PART NO. HV-AT(4)-PJ
CODE NO. CL354-0300-0-00
1 / 1

FORM HC0011-5-51