Apr.1.2024 Copyright 2024 HIROSE ELECTRIC CO., LTD. All Rights Reserved.
In case of consideration for using Automotive equipment / device which demand high reliability, kindly contact our sales window correspondents.

	△數 COUNT	訂正事項 DESCRIPTION OF REVISIONS	擔當 B Y	檢圖 CHKD	年月日 DATE		△數 COUNT	訂正事項 DESCRIPTION OF REVISIONS	擔當 B Y	檢圖 CHKD	年月日 DATE
△					. .	△					. .
△					. .	△					. .
△					. .	△					. .

REFERENCE DRAWING

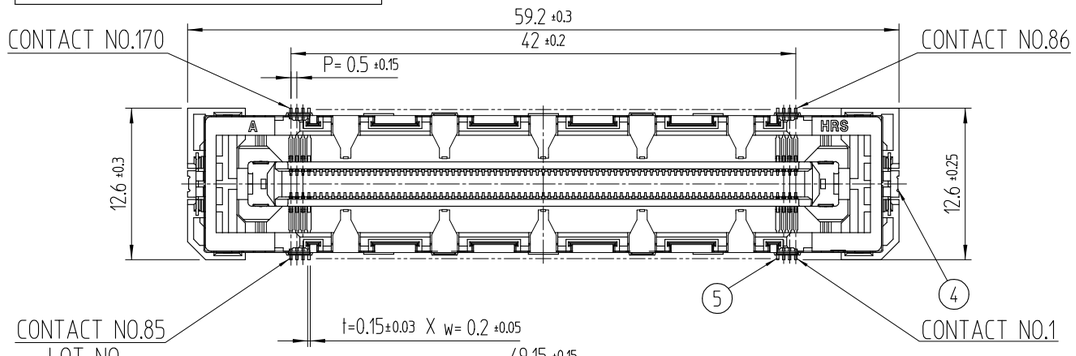

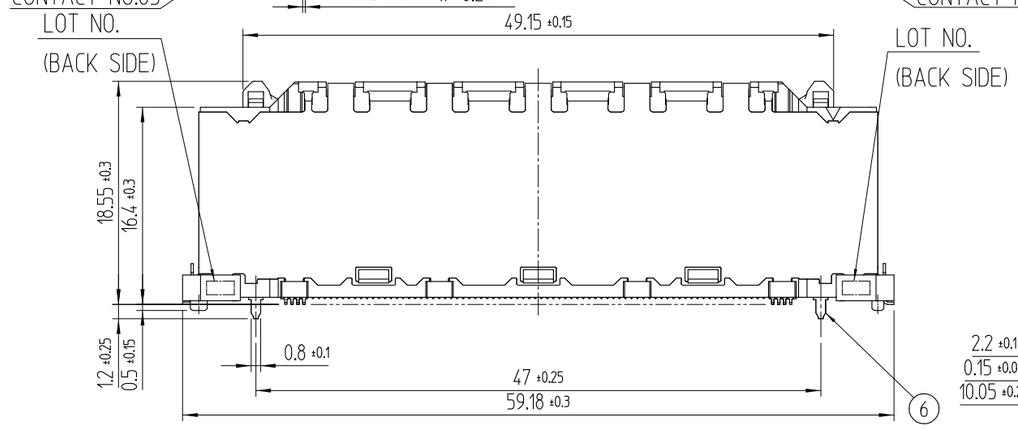

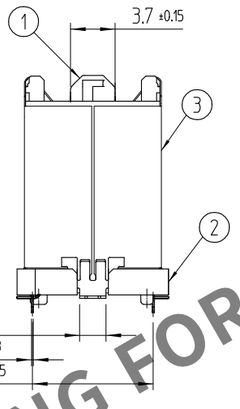

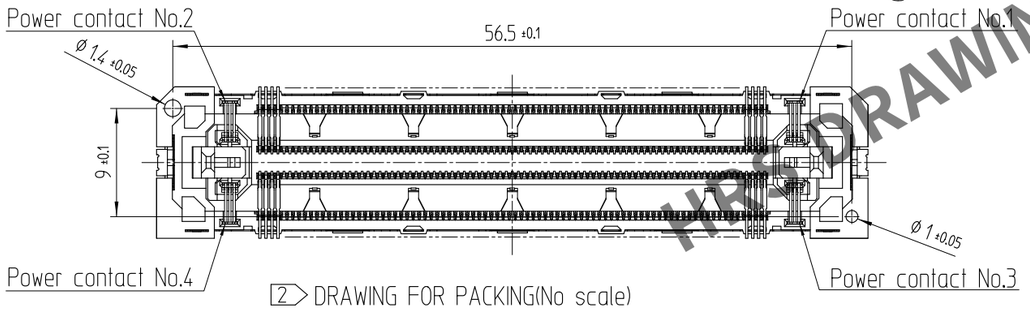

2> DRAWING FOR PACKING(No scale)

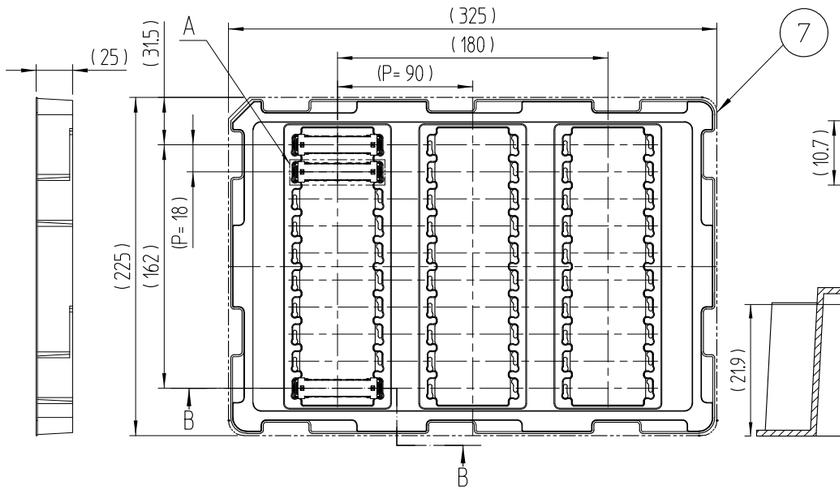

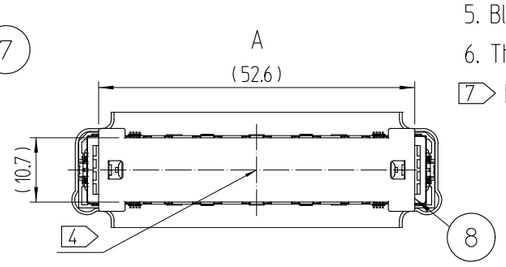

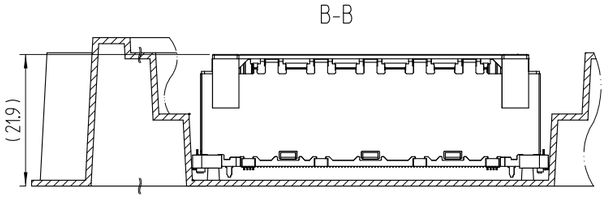

RECOMMENDED LAND PATTERN DIMENSION OF P.C.B

(P.C.B THICKNESS : t = 1.6mm)

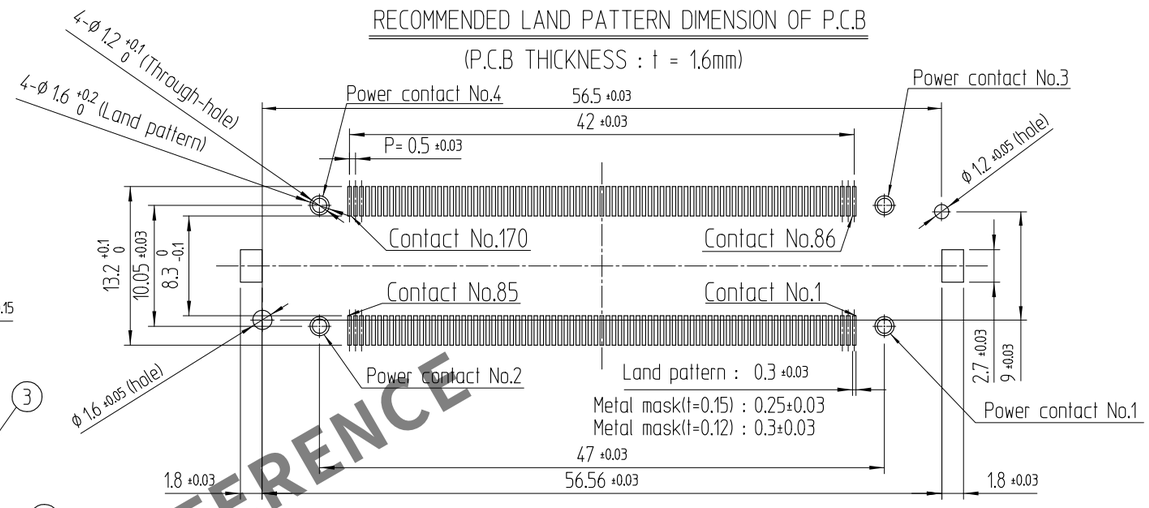

HRS DRAWING FOR REFERENCE

3> FLOATING ±0.8mm

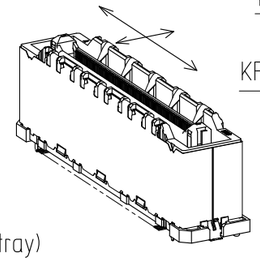

P.C.B DISTANCE

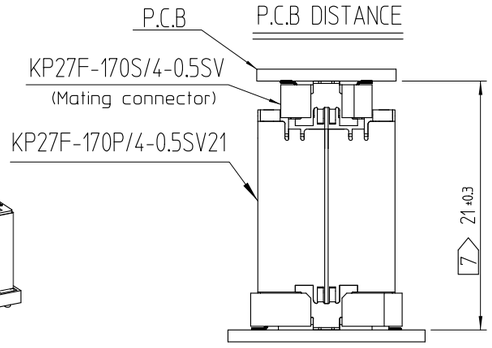

1. Lead co-planarity is 0.10mm MAX.
2> This is packaged in tray. (30pcs/tray)
3> Floating range of this connector is ±0.8mm MAX.
4> It shows the vacuum pickup area. Remove the CAP before mating connectors.
5. Blemish and hit mark can be occured through out the manufacturing process which doesn't affect quality level.
6. The dimensions in parentheses are for references.
7> Please use the connectors within the specified PCB distance.

NO.	PART	MATERIAL	FINISH,REMARKS	NO.	PART	MATERIAL	FINISH,REMARKS
4	METAL HOLD DOWN	COPPER ALLOY	NiP+SnP	8	CAP	PA	(CAP FOR VACUUM PICKUP)
3	SHIELD	COPPER ALLOY	NiP	7	TRAY	POLYSTYRENE	(TRAY)
2	CASE(B)	LCP	BLACK / UL94-0	6	MF CONTACT	COPPER ALLOY	NiP+AuP(SMT, CONTACT AREA)
1	CASE(A)	LCP	BLACK / UL94-0	5	CONTACT	COPPER ALLOY	NiP+AuP(SMT, CONTACT AREA)

TITLE	DRAWN	DESIGNED	CHECKED	APPROVED	RELEASED
	J.H.PARK 19.08.23	J.H.PARK 19.08.23	W.S.YOON 19.08.23	B.H.AN 19.08.23	ENG 20.04.01 DEPT

SCALE 2:1	DRAWING NO. EDC3-632772	PART NO. KP27F-170P/4-0.5SV21(800)
UNITS mm	HRS HIROSE KOREA CO.,LTD.	CODE NO 6547-0011-1-800
		1/1