May.1.2024 Copyright 2024 HIROSE ELECTRIC CO., LTD. All Rights Reserved.
In case of consideration for using Automotive equipment / device which demand high reliability, kindly contact our sales window correspondents.

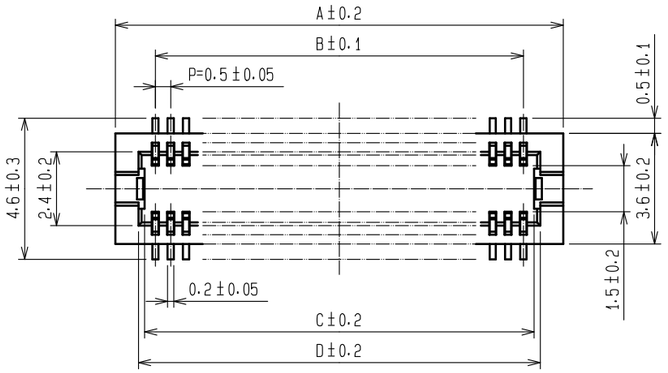

F-F(10:1)

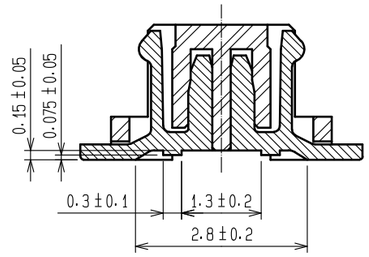

CODE No.	CONTACT	A	B	C	D	E
CL537-0191-0-51	10	4.6	2.0	2.7	3.1	2.8
CL537-0192-0-51	14	5.6	3.0	3.7	4.1	3.8
CL537-0193-0-51	20	7.1	4.5	5.2	5.6	5.3
CL537-0194-0-51	30	9.6	7.0	7.7	8.1	7.8
CL537-0195-0-51	32	10.1	7.5	8.2	8.6	8.3
CL537-0196-0-51	36	11.1	8.5	9.2	9.6	9.3
CL537-0197-0-51	40	12.1	9.5	10.2	10.6	10.3
CL537-0198-0-51	50	14.6	12.0	12.7	13.1	12.8
CL537-0199-0-51	60	17.1	14.5	15.2	15.6	15.3
CL537-0285-0-51	80	22.1	19.5	20.2	20.6	20.3

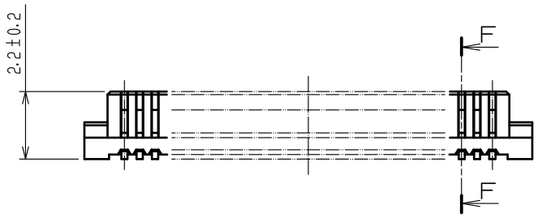

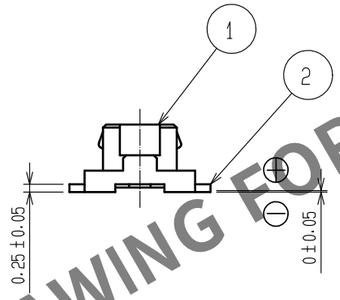

RECOMMENDED METAL MASK (10:1)

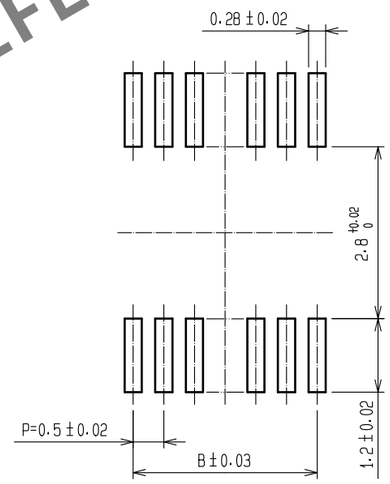

RECOMMENDED PATTERN(10:1)

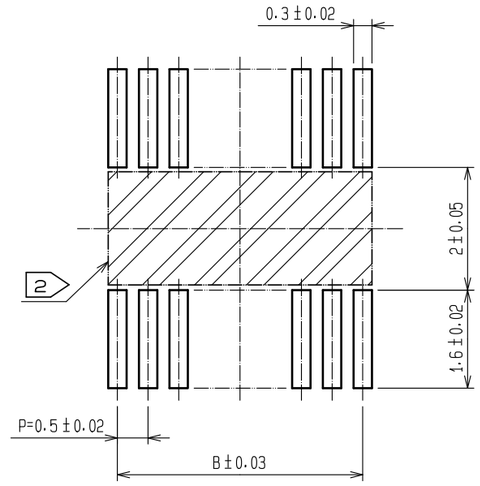

METAL MASK THICKNESS : 120 μm

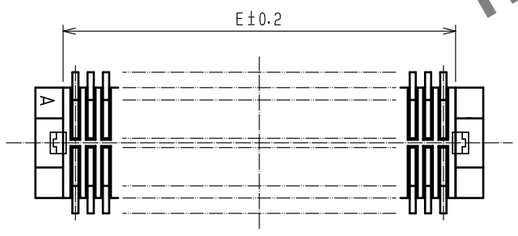

NOTES 1 LEAD CO-PLANARITY SHALL BE 0.08 mm MAX.
2 IF THERE IS PATTERN ON ▨ PART, THERE IS A POSSIBILITY THAT IT WILL MAKE CONTACT WITH THE LEADS.

NO.	MATERIAL	FINISH , REMARKS	NO.	MATERIAL	FINISH , REMARKS
2	PHOSPHOR BRONZE	CONTACT AREA:GOLD PLATED 0.2μm min LEAD AREA:GOLD PLATED 0.015μm min OTHERS(UNDER PLATING):NICKEL PLATED 2μm min	6	PS	CLEAR (REINFORCEMENT COLLAR)
			5	PS	BLACK (PLASTIC REEL)
			4	POLYESTER	CLEAR (COVER TAPE)
1	POLYAMIDE	UL94V-0, BLACK	3	PS	CLEAR (EMBOSSED CARRIER TAPE)

UNITS	SCALE	COUNT	DESCRIPTION OF REVISIONS	DESIGNED	CHECKED	DATE
mm	5 : 1	0				

HIROSE ELECTRIC CO., LTD.

APPROVED	: WR. FUKUCHI	20200702	DRAWING NO.	EDC-390688-51-77
CHECED	: TS. MIYAZAKI	20200702	PART NO.	DF12NC(3.0)-*DS-0.5V(51)
DESIGNED	: RN. IIDA	20200702	CODE NO.	CL537
DRAWN	: RN. IIDA	20200702		0 1/2

HRS DRAWING FOR REFERENCE

May.1.2024 Copyright 2024 HIROSE ELECTRIC CO., LTD. All Rights Reserved.
In case of consideration for using Automotive equipment / device which demand high reliability, kindly contact our sales window correspondents.

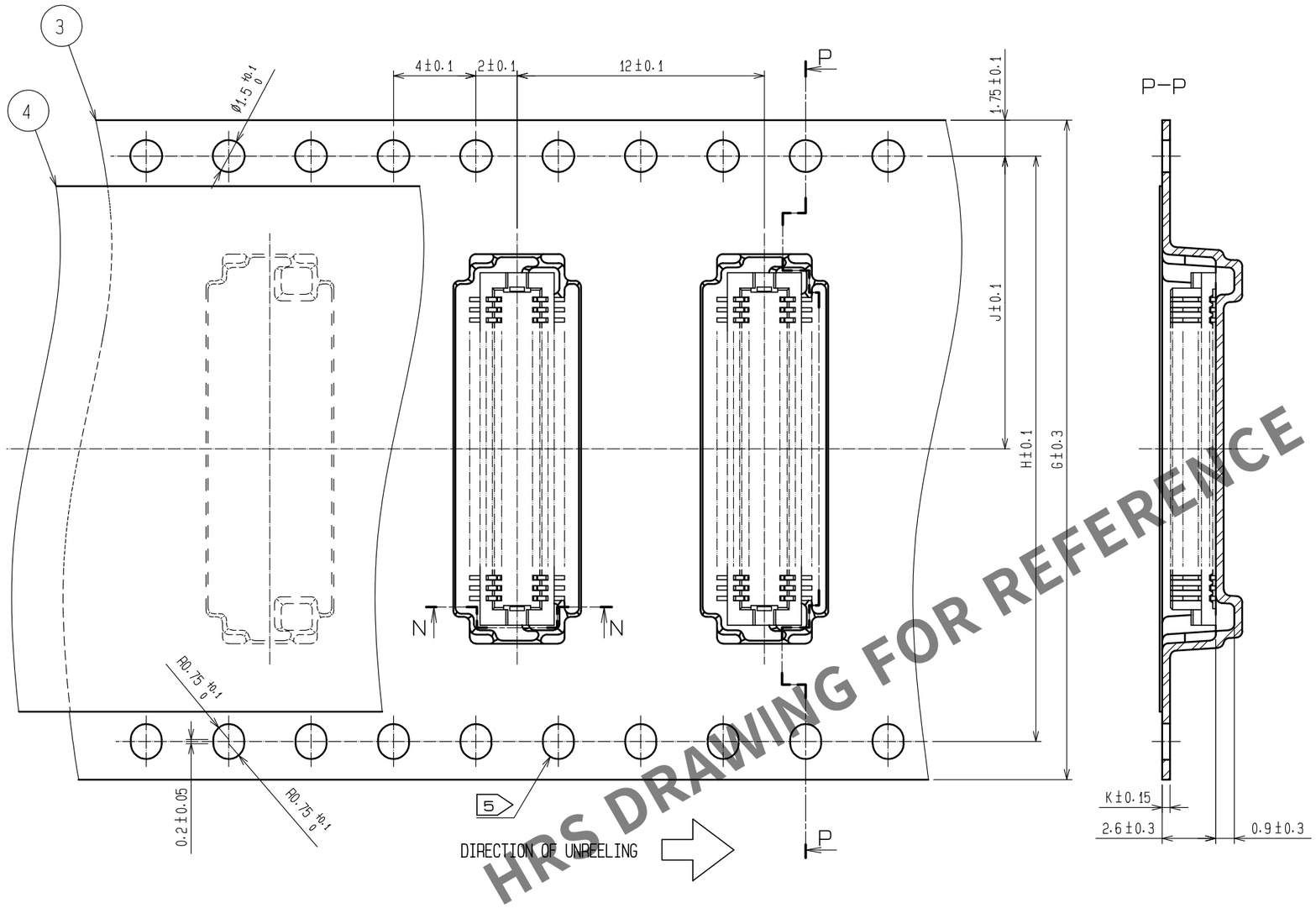

STYLE AND DIMENSION OF REEL (FREE)

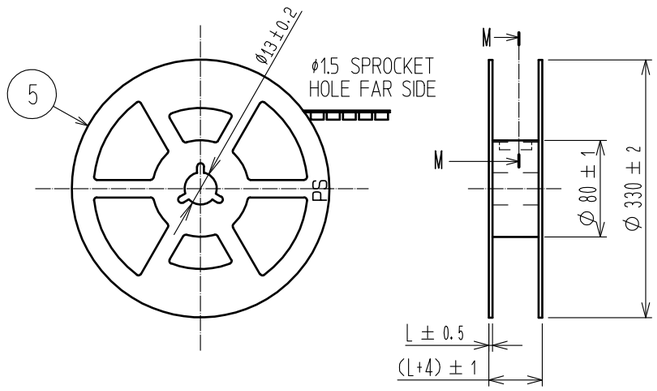

M-M(FREE)

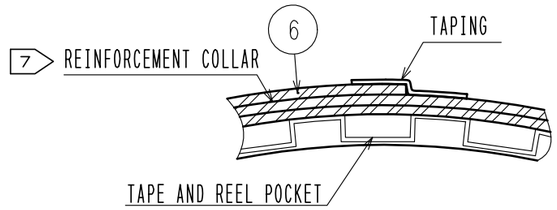

HRS DRAWING FOR REFERENCE

CODE No.	CONTACT	G	H	J	K	L
CL537-0191-0-51	10	16	-	7.5	0.30	17.5
CL537-0192-0-51	14	16	-	7.5	0.30	17.5
CL537-0193-0-51	20	16	-	7.5	0.38	17.5
CL537-0194-0-51	30	24	-	11.5	0.38	25.5
CL537-0195-0-51	32	24	-	11.5	0.30	25.5
CL537-0196-0-51	36	24	-	11.5	0.38	25.5
CL537-0197-0-51	40	24	-	11.5	0.38	25.5
CL537-0198-0-51	50	24	-	11.5	0.38	25.5
CL537-0199-0-51	60	32	28.4	14.2	0.38	33.5
CL537-0285-0-51	80	44	40.4	20.2	0.38	45.5

N-N

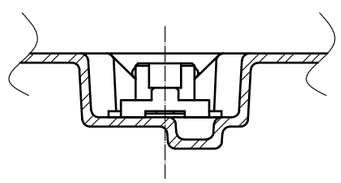

NOTES 3 1 REEL 1000 CONNECTORS.

4 AT THE BEGINNING OF THE REEL, 30 COMPONENTS SHALL BE EMPTY.
AT THE END OF THE REEL, 20 COMPONENTS SHALL BE EMPTY.

5 WHEN THE TAPE WIDTH IS 32 mm OR 44 mm, SPROCKET HOLES SHALL BE SET ON BOTH SIDE OF REEL AS SHOWN ON THIS DRAWING.

6 PEEL FORCE REFERS TO JIS C 0806.(IEC 60286-3)

7 AFTER PACKING, ROLL 2 METERS OF THE REINFORCEMENT COLLAR TO OUTER CIRCUMFERENCE OF TAPE AND REEL POCKET, AND TAPE DOWN AT THE END THE COLLAR.

HRS	
DRAWING NO.	EDC-390688-51-77
PART NO.	DF12NC(3.0)-*DS-0.5V(51)
CODE NO.	CL537
	0 2/2