Sep.1.2026 Copyright 2026 HIROSE ELECTRIC CO., LTD. All Rights Reserved.
In case of consideration for using Automotive equipment / device which demand high reliability, kindly contact our sales window correspondents.

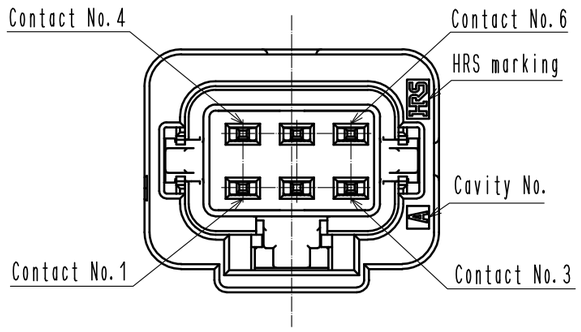


Recommended Pattern (Free)
(Recommended board thickness t=1.6mm)

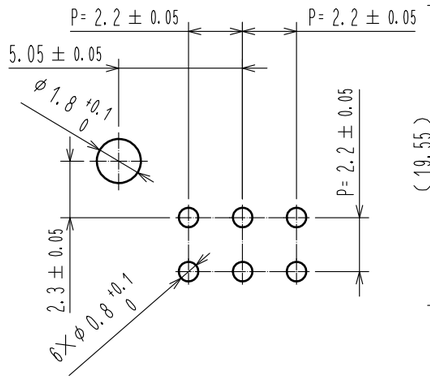


Mated figure(Free)

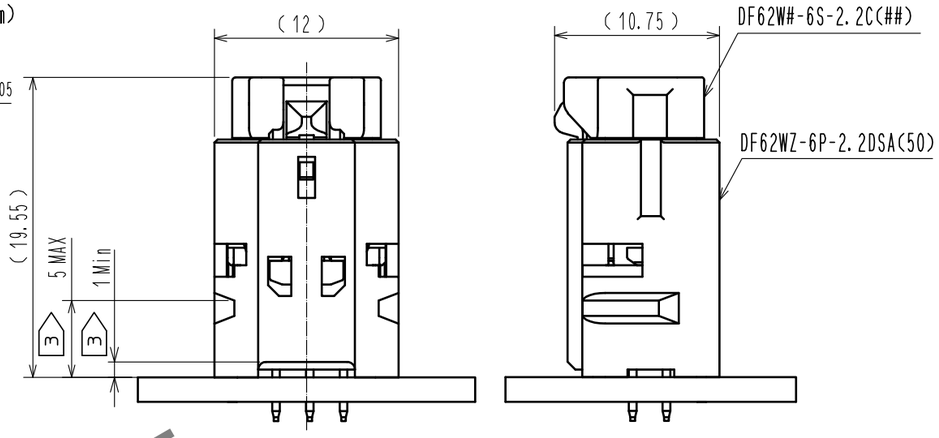


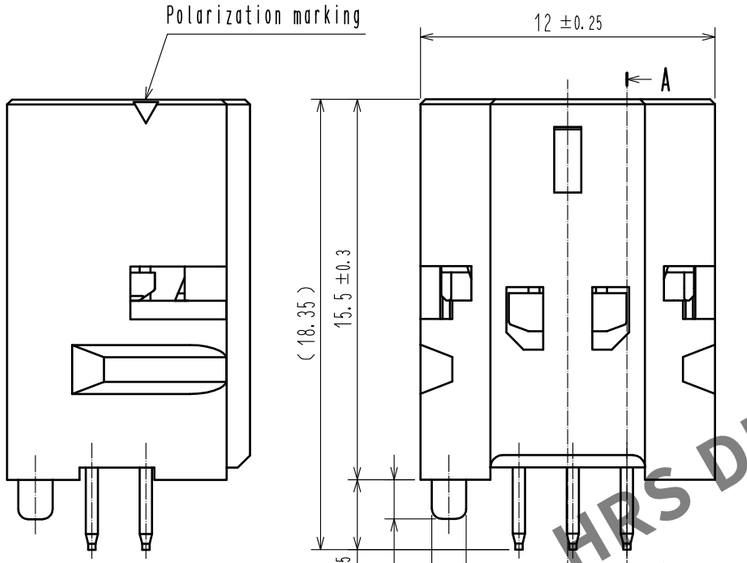





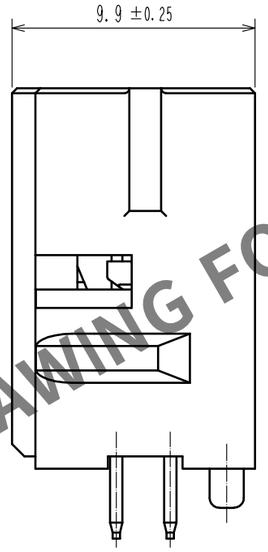


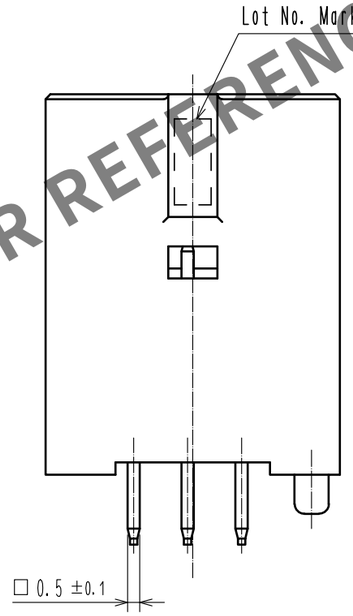


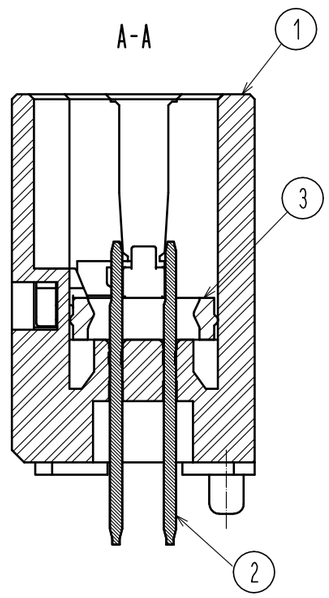


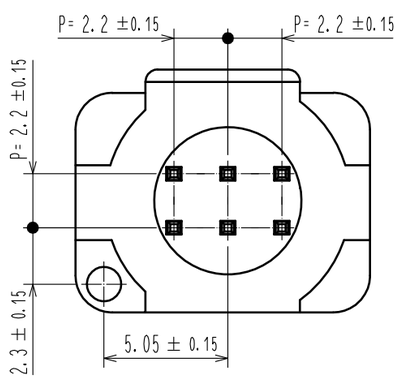


HRS DRAWING FOR REFERENCE

Notes 1. Max 240 pcs. / tray. Sales unit : 240pcs.
2. The dimensions in parenthesis are for reference.
3 Potting is required for use.
Potting height: 1mm to 5mm.
4. Always refer to the manuals below for operation of this product.
For mating, unmating / Operation manual ETAD-H0761
For operation / Board-to-wire Connector Guidelines ETAD-H1023

| NO. | MATERIAL | FINISH , REMARKS |
|---|---|---|
| 4 | PS | Tray, White |
| 3 | Silicone rubber | Bengara |
| 2 | Brass | Contact area : AuP0.2μm min.<br>DIP area : SnP1μm min.<br>Others : NiP0.5μm min. |
| 1 | PBT | UL94V-0(Black) |

| UNITS | SCALE | NO. | COUNT | DESCRIPTION OF REVISIONS | DESIGNED | CHECKED | DATE |
|---|---|---|---|---|---|---|---|
| mm | 4 : 1 | 0 | | | | | |

| | | | |
|---|---|---|---|
| APPROVED | SJ. OKAMURA | 20250904 | DRAWING NO. EDC-393048-50-00 |
| CHECKED | HT. SATO | 20250904 | PART NO. DF62WZ-6P-2.2DSA(50) |
| DESIGNED | YT. NIITSUMA | 20250904 | CODE NO. CL0544-1059-0-50 |
| DRAWN | YT. NIITSUMA | 20250904 | 0 1/2 |

HIROSE ELECTRIC CO., LTD.

Sep.1.2026 Copyright 2026 HIROSE ELECTRIC CO., LTD. All Rights Reserved.
In case of consideration for using Automotive equipment / device which demand high reliability, kindly contact our sales window correspondents.

Package figure(Free)

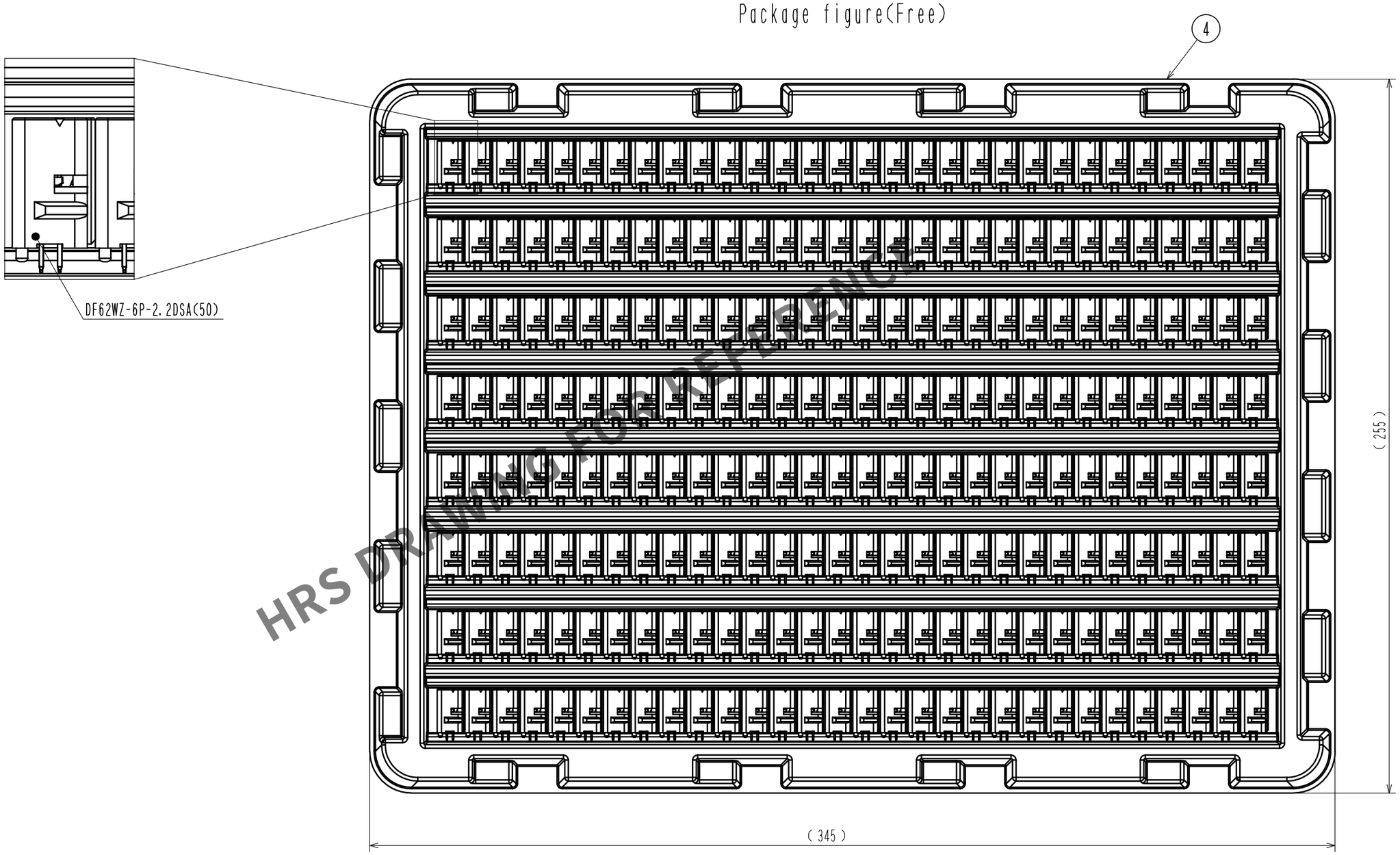


HRS DRAWING FOR REFERENCE

| | | |
|---|---|---|
| HRS | DRAWING NO. | EDC-393048-50-00 |
| | PART NO. | DF62WZ-6P-2.2DSA(50) |
| | CODE NO. | CL0544-1059-0-50 |

0 2/2

FORM HC0011-5-8