Apr.1.2024 Copyright 2024 HIROSE ELECTRIC CO., LTD. All Rights Reserved.
In case of consideration for using Automotive equipment / device which demand high reliability, kindly contact our sales window correspondents.

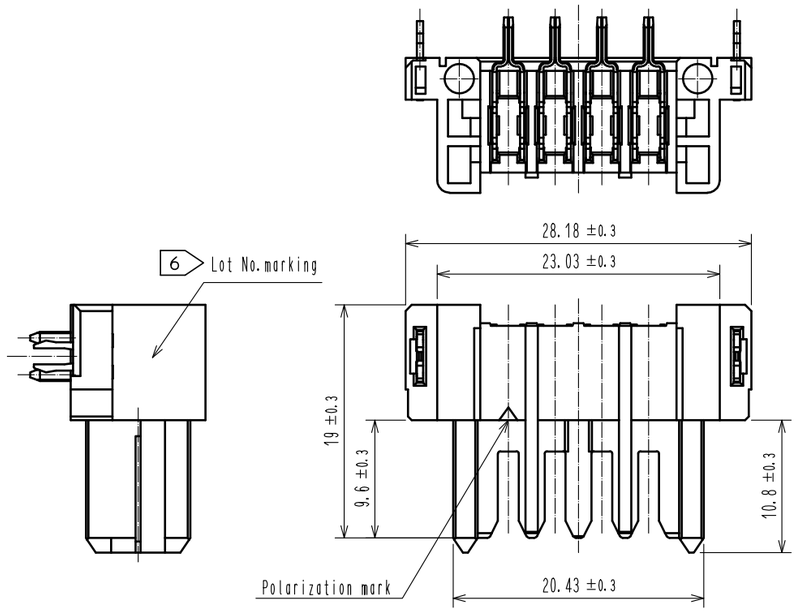

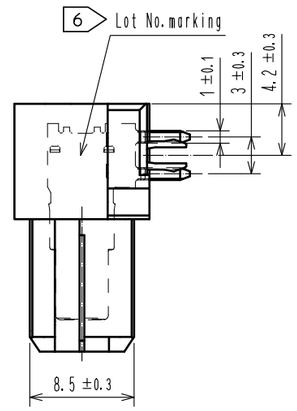

Cross section of mating(Free)
Vertical connection

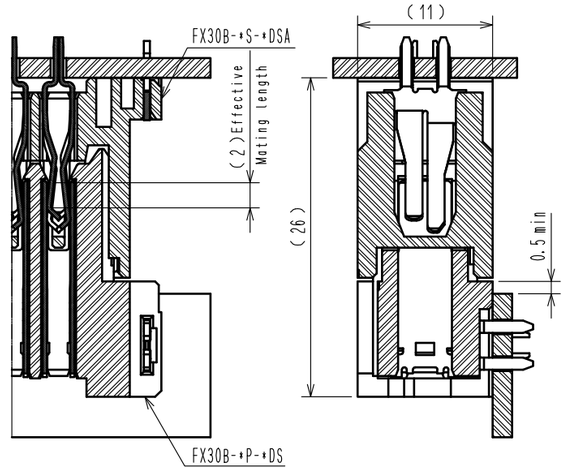

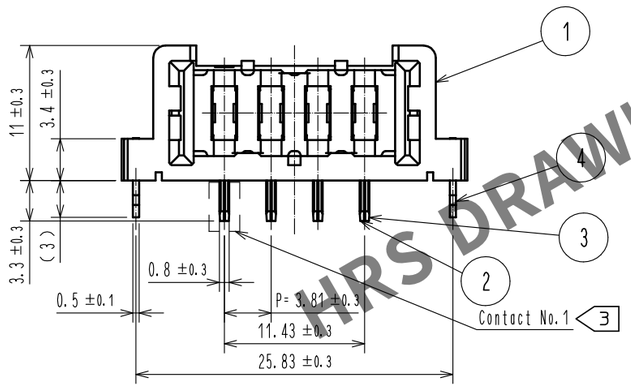

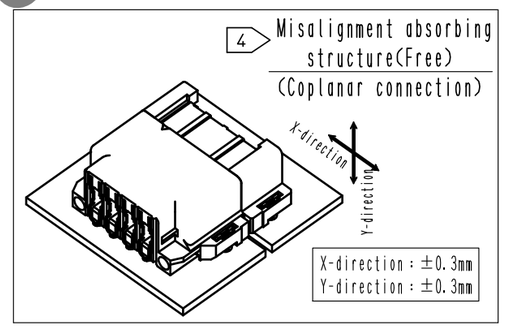

Cross section of mating(Free)
Coplanar connection

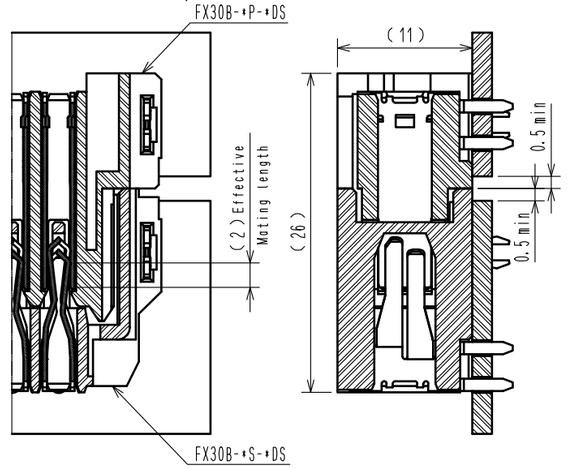

HRS DRAWING FOR REFERENCE

Note 1 This product is packaged in tray.(24pcs/tray)
2 Blemish and hit mark can be occured through out the manufacturing process whitch dosen't affect quality level.
Also, black spot could be observed on the surface of housing.
3 For the contact No., adjacent two pairs of leads placed back-to-back (4 leads in total) compose one line.
4 Misalignment absorbing range:±0.3mm max.
5 The dimension in parentheses are for references.
6 Lot No. is indicated at either one of the position as shown.
7 Pay attention to the recommended PCB thickness and finished through-hole dimensions.
Low retention force to PCB could induce angled mounting due to the unbalanced center of the connector.
1 8 UL(File No.E52653)
C-UL(File No.E52653)
2 TUV(Certificate No.R50275872) authorization article.

NO.	MATERIAL	FINISH , REMARKS
2	COPPER ALLOY	CONTACT AREA:GOLD-PLATING 0.1μm LEAD AREA:TIN-PLATING 1.0μm UNDER PLATING:NICKEL 1.0μm
1	POLYAMIDE	BLACK UL94V-0

NO.	MATERIAL	FINISH , REMARKS
5	POLYSTYRENE	
4	PHOSPHOR BRONZE	TIN-PLATING 3.0μm UNDER PLATING:NICKEL 1.0μm
3	COPPER ALLOY	CONTACT AREA:GOLD-PLATING 0.1μm LEAD AREA:TIN-PLATING 1.0μm UNDER PLATING:NICKEL 1.0μm

UNITS	SCALE	COUNT	DESCRIPTION OF REVISIONS	DESIGNED	CHECKED	DATE
mm	2 : 1	2 1	DIS-F-00006019	AK. IWAHORI	HT. YAMAGUCHI	20200406

HIROSE ELECTRIC CO., LTD.

APPROVED	HS. OKAWA	20130313
CHECED	KI. HIROKAWA	20130312
DESIGNED	DK. AIMOTO	20130311
DRAWN	DK. AIMOTO	20130311

DRAWING NO. EDC3-347270-00
PART NO. FX30B-4P-3.81DS
CODE NO. CL570-3402-2-00
2 1/2

Apr.1.2024 Copyright 2024 HIROSE ELECTRIC CO., LTD. All Rights Reserved.
In case of consideration for using Automotive equipment / device which demand high reliability, kindly contact our sales window correspondents.

Recommended hole pattern dimension of PCB(5:1)
(Connector mounting side, PCB thickness:t=1.6mm) 7

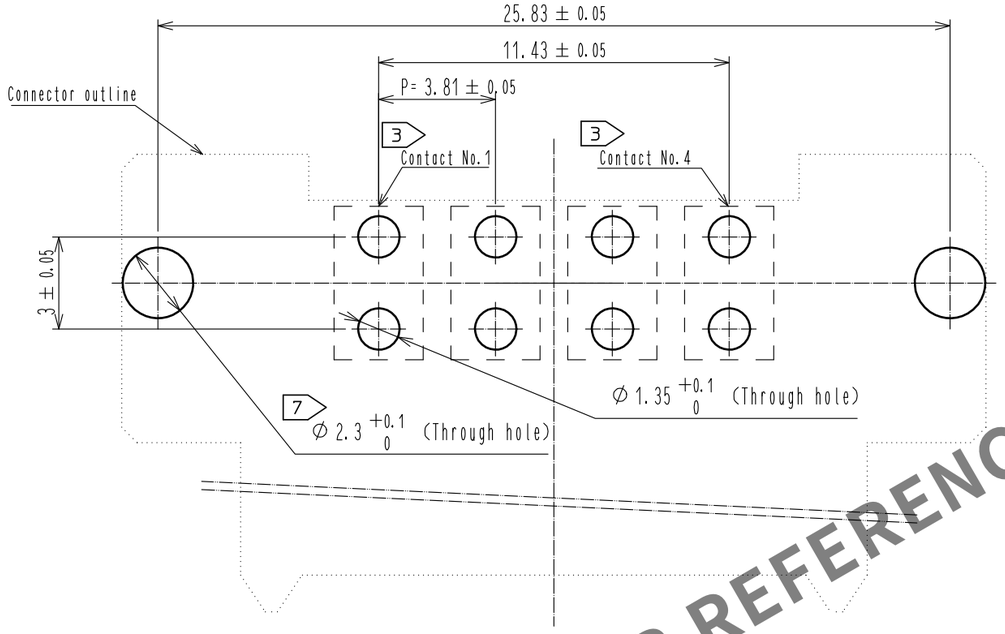

1 Drawing for packaging(1:2)

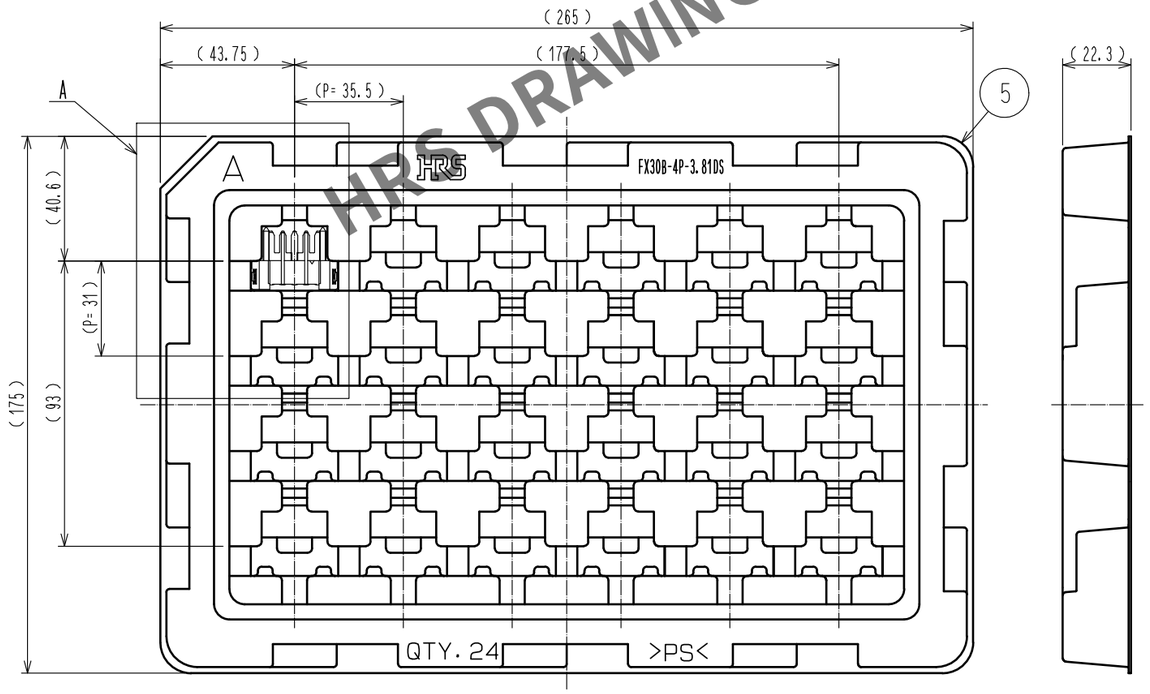

A(1:1)

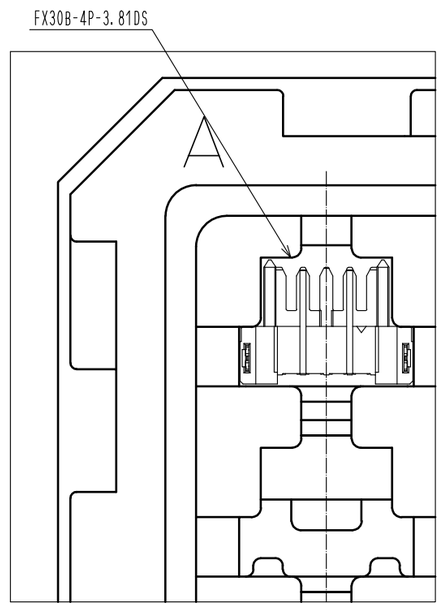

HRS DRAWING FOR REFERENCE

HRS	DRAWING NO.	EDC3-347270-00
	PART NO.	FX30B-4P-3.81DS
	CODE NO.	CL570-3402-2-00 △2 2/2