May.1.2024 Copyright 2024 HIROSE ELECTRIC CO., LTD. All Rights Reserved.
In case of consideration for using Automotive equipment / device which demand high reliability, kindly contact our sales window correspondents.

	COUNT	DESCRIPTION OF REVISIONS	BY	CHKD	DATE		COUNT	DESCRIPTION OF REVISIONS	BY	CHKD	DATE
△					. .	△					. .
△					. .	△					. .
△					. .	△					. .

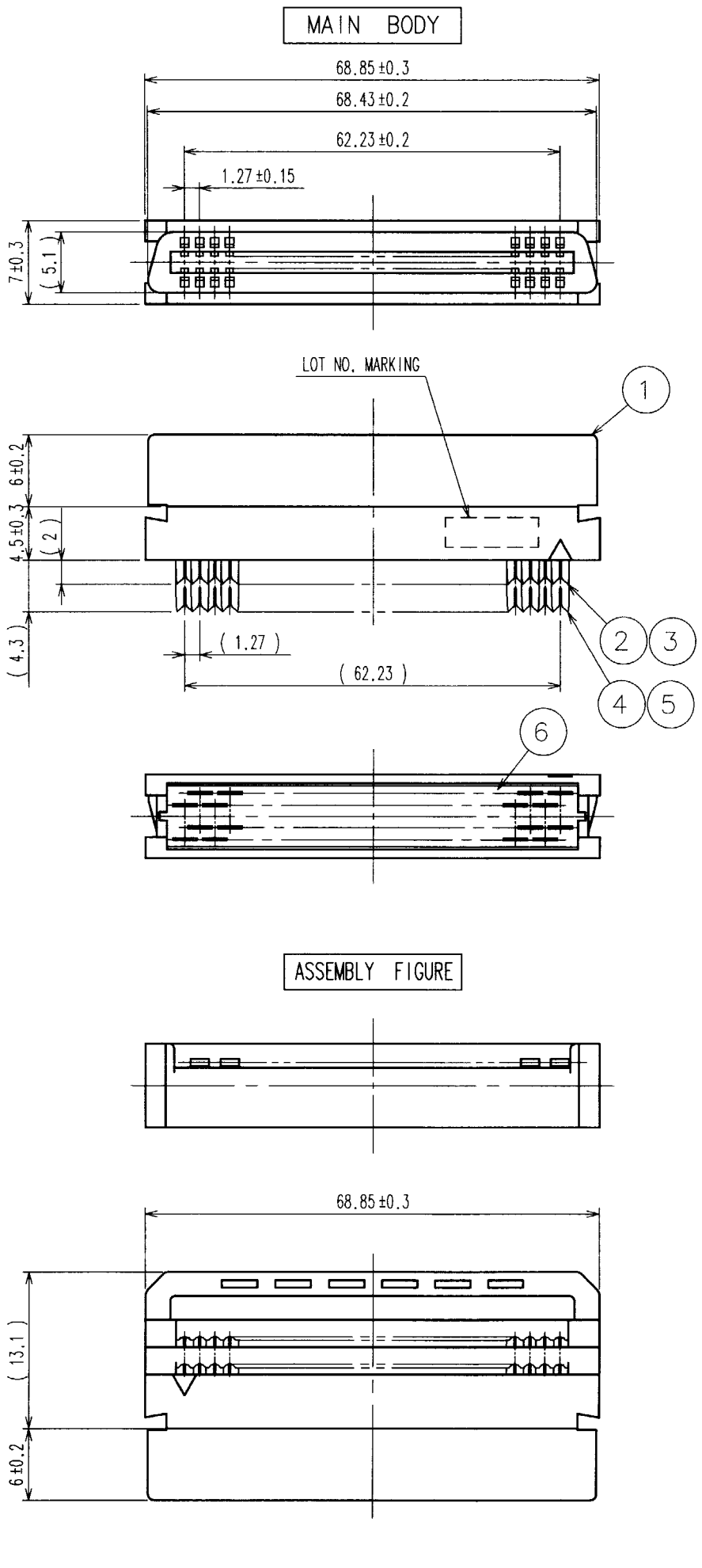

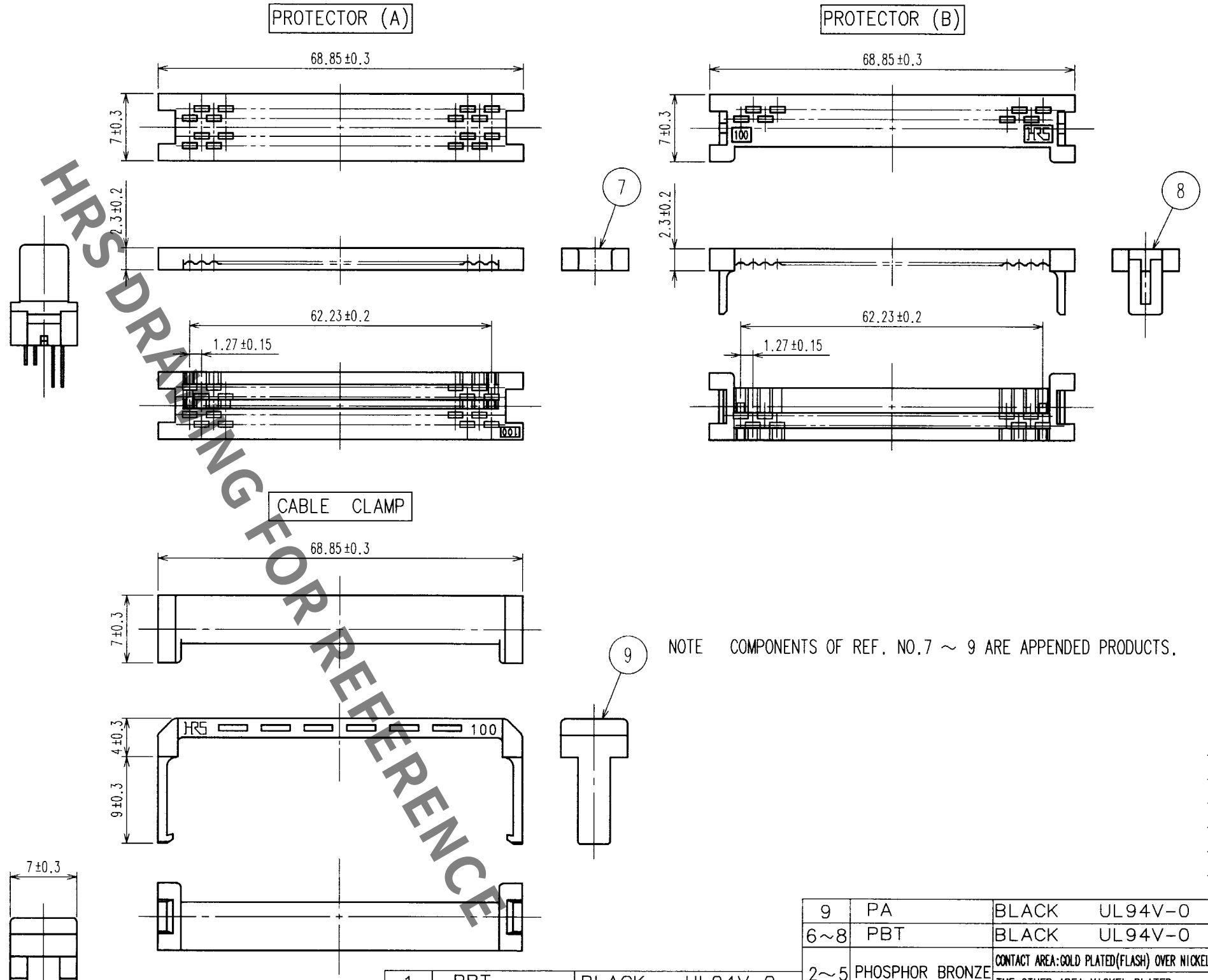

NOTE COMPONENTS OF REF. NO.7 ~ 9 ARE APPENDED PRODUCTS.

HRS DRAWING FOR REFERENCE

NO.	MATERIAL	FINISH, REMARKS
1	PBT	BLACK UL94V-0
2~5	PHOSPHOR BRONZE	CONTACT AREA:GOLD PLATED(FLASH) OVER NICKEL THE OTHER AREA:NICKEL PLATED
6~8	PBT	BLACK UL94V-0
9	PA	BLACK UL94V-0

CODE NO.(OLD)	DRAWN	DESIGNED	CHECKED	APPROVED	RELEASED
CL	K.NAKAMURA 02.02.27	H.Yamaguchi 02.03.04	H.Okawa 02.03.04	Y.Yoshimura 02.03.05	. .

SCALE FREE	DRAWING NO. EDC3-150665	PART NO. FX2BA-100SA-1.27R
UNITS mm	HRS HIROSE ELECTRIC CO., LTD	CODE NO. CL572-0678-0 1/1

TO
PCK

FORM NO.229