May.1.2024 Copyright 2024 HIROSE ELECTRIC CO., LTD. All Rights Reserved.
In case of consideration for using Automotive equipment / device which demand high reliability, kindly contact our sales window correspondents.

	COUNT	DESCRIPTION OF REVISIONS	BY	CHKD	DATE		COUNT	DESCRIPTION OF REVISIONS	BY	CHKD	DATE
△					. .	△					. .
△					. .	△					. .
△					. .	△					. .

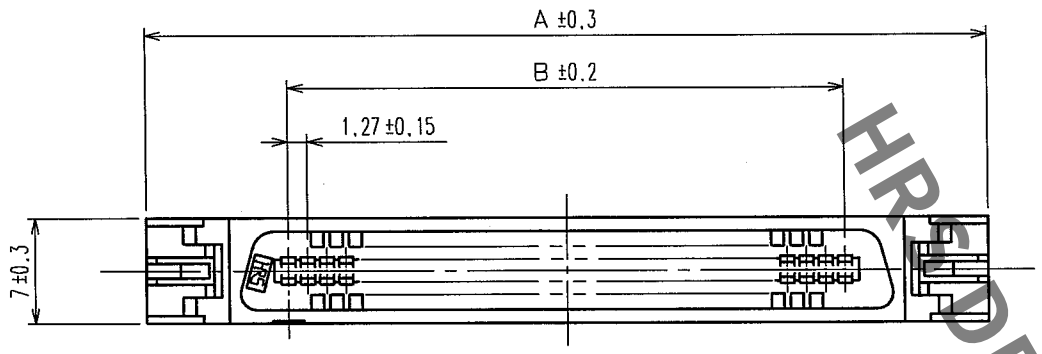

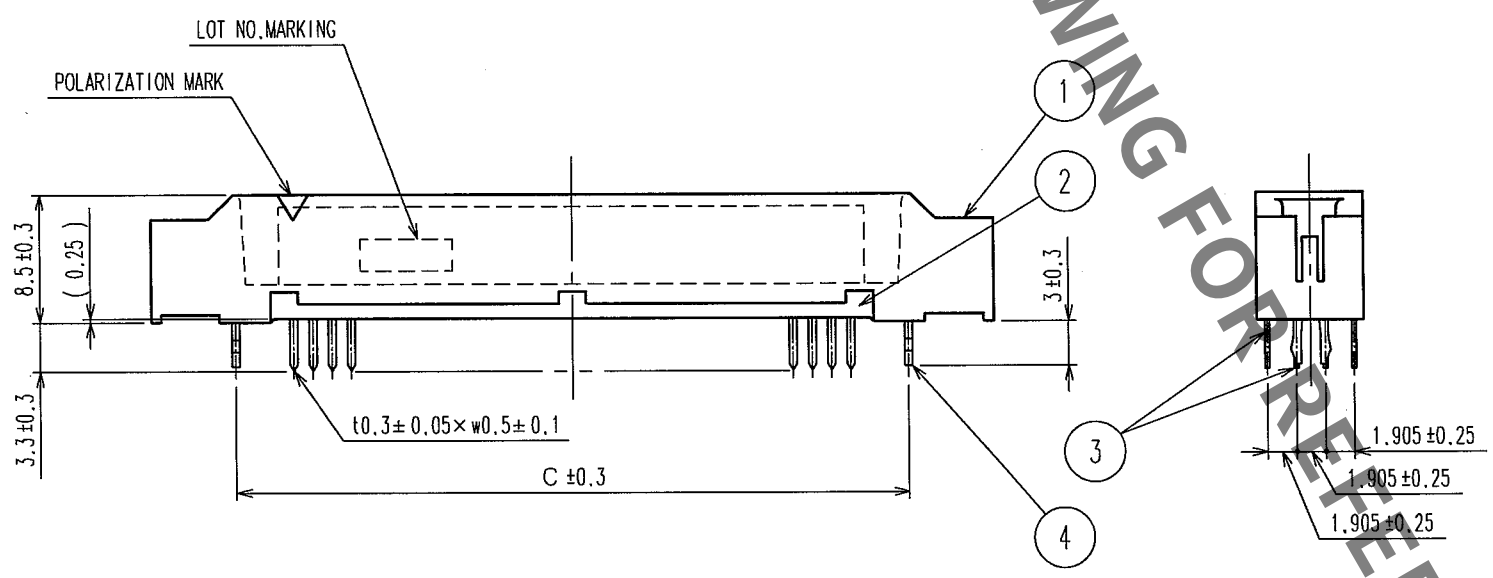

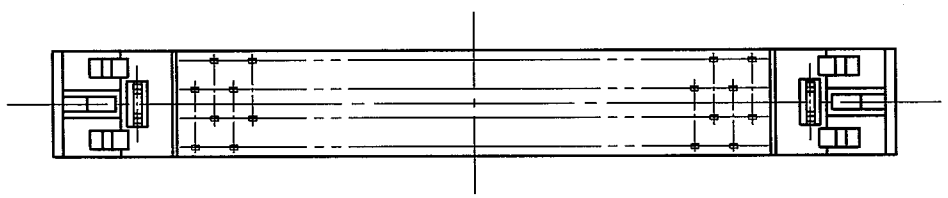

RECOMMENDEND PC BOARD HOLE PATTERN(MOUNTING SIDE)

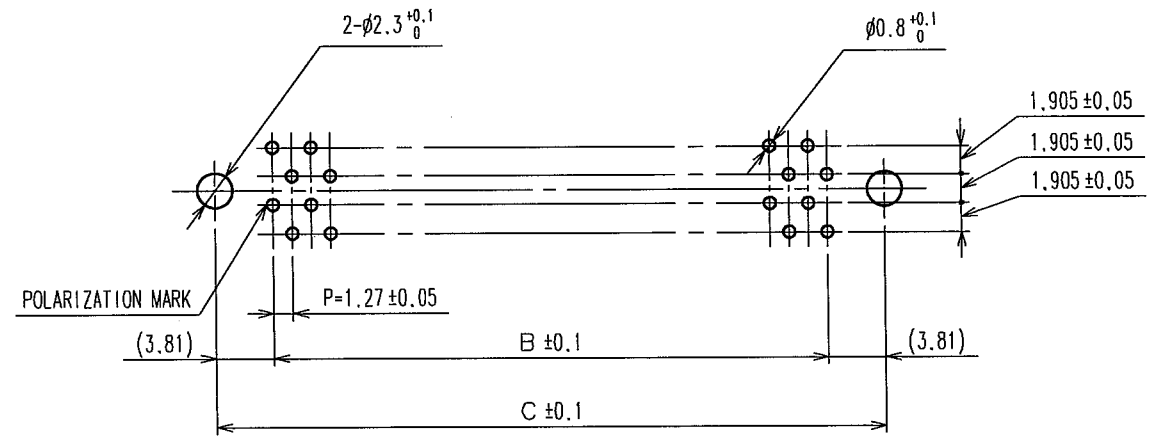

PART No.	CODE No.	2	A	B	C
FX2B-40PA-1.27DSAL(71)	CL572-0873-5-71	40	43.03	24.13	31.75
FX2B-52PA-1.27DSAL(71)	CL572-0874-8-71	52	50.65	31.75	39.37
FX2B-60PA-1.27DSAL(71)	CL572-0875-0-71	60	55.73	36.83	44.45
FX2B-68PA-1.27DSAL(71)	CL572-0876-3-71	68	60.81	41.91	49.53
FX2B-80PA-1.27DSAL(71)	CL572-0877-6-71	80	68.43	49.53	57.15
FX2B-100PA-1.27DSAL(71)	CL572-0878-9-71	100	81.13	62.23	69.85

NOTES 1. THE DIMENSIONS IN PARENTHESES ARE FOR REFERENCE.
2 NUMBER OF PIN.

HRS DRAWING FOR REFERENCE

NO.	MATERIAL	FINISH, REMARKS
4	PHOSPHOR BRONZE	TIN-PLATING
1, 2	POLYAMIDE	BLACK UL94V-0

NO.	MATERIAL	FINISH, REMARKS
3	BRASS	CONTACT AREA:GOLD FLASH DIP AREA:TIN-PLATING 2μm min UNDER PLATING:NICKEL 1μm min

CODE NO.(OLD)	DRAWN	DESIGNED	CHECKED	APPROVED	RELEASED
CL	I.OKAYAMA 04.06.02	K.NAKAMURA 04.06.02	H.OKAWA 04.06.14	H.OKAWA 04.06.14	

SCALE FREE
UNITS mm

DRAWING NO. EDC3-151043-21

HRS HIROSE ELECTRIC CO.,LTD.

PART NO. FX2B-※※PA-1.27DSAL(71)

CODE NO. CL572

1/1

TO
PCK

FORM NO.233