0.5mm pitch, Next Generation High Speed Wire-to-Board Connectors

FX16 Series

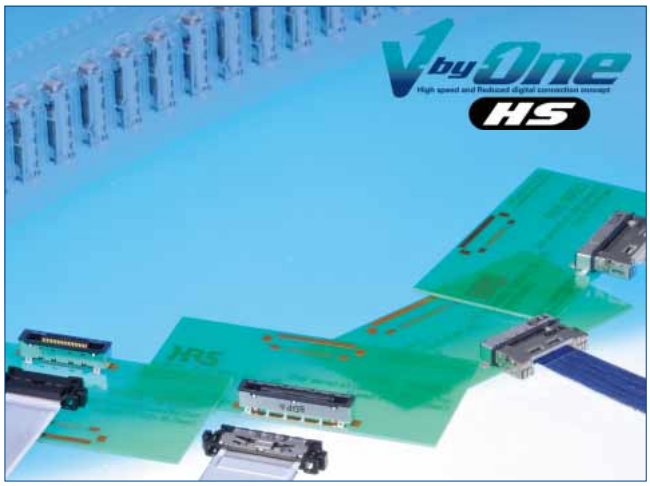

"V-by-One® HS" is a trade mark of Thine Electronics, Inc.

■Features

1.Supports next-generation high speed transmissions

FX16 Series supports next-generation high-speed signals including signal transmission of up to 6Gbps. The FX16 series delivers exceptional impedance-matching, even at sharp signal rise times of Tr=50ps (10 - 90%). (Fig.1)

2. V-by-One® HS compatible connector

The FX16 Series connector is recommended by Thine Electronics, Inc. for their V-By-One® HS next-generation panel interface, due to the connector's outstanding signal integrity performance at 3.75Gb/s - the top data rate of the interface. As shown in Fig.2 on the right, the eye pattern remains wide open at 3.75Gbps. (Please refer to the transmission property data shown on Page 4.)

3. A patented flip-lock harness simplifies FFC applications.

We have incorporated our proprietary patented flip-lock design that greatly simplifies FFC assembly by eliminating the need for costly cable soldering (Fig.3).

4. Vertical cable plug

The vertical plug mating style simplifies the assembly process. In addition, it offers a lower profile by limiting the mated height to only 8mm (Fig.4).

5. Multiple variations of plug style, cable type and number of positions available

The series features a common plug for shielded FFC and micro coaxial cable. Available plug variations include right-angle, vertical style for batch harness assembly and direct plugin styles. Multiple position sizes are available (please see page 5 for variations).

6. RoHS compliant

All materials and substances used to produce these parts fully comply with RoHS standards.

Supports next generation high-speed transmission

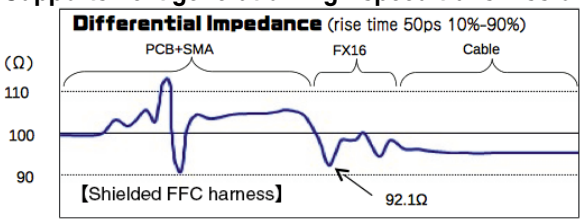

Fig.1

V-by-One® HS compatible connector

Fig.2

Simplified FFC harness assembly with a flip-lock system

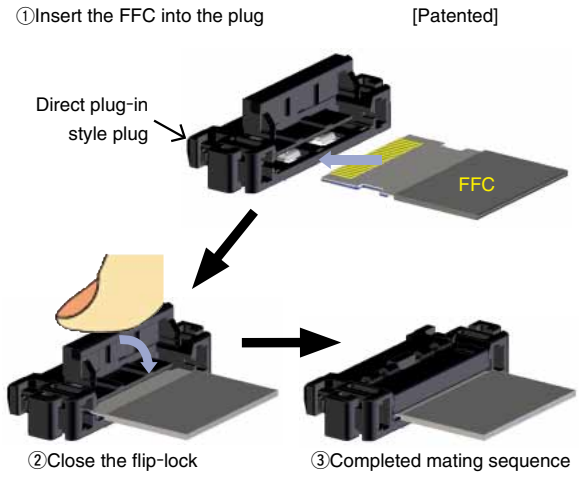

Fig.3

Vertical mating, horizontal wiring

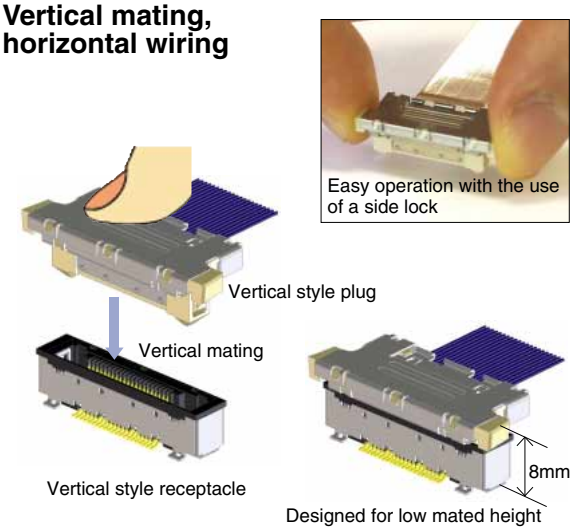

Fig.4

May.1.2024 Copyright 2024 HIROSE ELECTRIC CO., LTD. All Rights Reserved.

■Product Specifications

Ratings	Current Rating 0.5A	Voltage Rating AC60V
	Operating Temperature Range : -55 to 85℃ (Note 1) (Note 2)	Operating Humidity Range : relative humidity of no more than 85% (Note 2) (Note 4)
	Storage Temperature Range : -10 to 60℃ (Note 3)	Operating Humidity Range : relative humidity of no more than 70% (Note 3) (Note 4)

Items	Specifications	Conditions
1.Contact resistance	80mΩ max (Note 5)	Measured at 1mA
2.Insulation resistance	500MΩ minimum	Measured at DC 100V
3.Withstand voltage	No flashover or breakdown	AC 200V is applied for 1 minute
4.Overall push-pull force	Inserting force (0.5 × number of pos.) : no more than 1N Extracting force (0.05 × number of pos.) : no less than 1N	Measured by using applicable connectors
5.Durability	Contact resistance : variation from the initial state : no more than 20mΩ	50 mating cycles
6. Vibration	No electrical discontinuity of 1μ or greater	Frequency 10 - 55Hz, half amplitude 0.75mm, 2 hours for 3 axial directions
7.Shock	No electrical discontinuity of 1μ or greater	Accelerated velocity : 490m/s^2, for 11ms, half-sine in 3 directions, 3 times for each of the three directions (axes)
8. Humidity resistance	Contact resistance : variation from the initial state : 20mΩ max Insulation resistance : minimum of 500MΩ	96 hours at 40℃ temperature and the humidity range from 90 to 95%
9. Temperature cycles	Contact resistance : variation from the initial state : 20mΩ max Insulation resistance : 500MΩ min	Temperature : -55 → 5 to 35 → 85 → 5 to 35℃ 5 cycles of the testing time period of 30 → 5 → 30 → 5 minutes

Note 1 : Includes temperature rise caused by current flow.
Note 2 : The operating temperature range when the operating humidity is above 80% shall be -55 to 40℃.
Note 3 : The term "storage" refers to the long-term storage condition of unused products before PCB mounting.
Note 4 : No condensation allowed.
Note 5 : The conductor resistance of connected cables is not included.

■Materials / Finish

●Receptacle

Part	Materials	Finish	Remarks
Insulator	FX16 : LCP resin FX16M2 : Polyamide resin	Black color	UL94V-0
Contact	Copper alloy	Gold plating	————
Shell	Copper alloy	Pure tin-plating	————

●Plug

Part	Materials	Finish	Remarks
Insulator	FX16-SD/SDL : Polyamide resin FX16F-HC : PC resin FX16M2-HC : PBT resin	FX16-SD/SDL : Beige color FX16F-HC : Black color FX16M2-HC : Black color	UL94V-0
Contact (FX16-SD/SDL only)	Copper alloy	Contact interface area : gold plating Termination area : pure tin-plating	————
Shell	FX16-SD/SDL : Stainless steel FX16F-HC : Stainless steel FX16M2-HC : Copper alloy	FX16-SD/SDL : Nickel plating FX16F-HC : Nickel plating FX16M2-HC : Pure tin-plating	————

●Accessories

Part	Materials	Finish	Remarks
Cover shell	Stainless steel	————	————

May.1.2024 Copyright 2024 HIROSE ELECTRIC CO., LTD. All Rights Reserved.

■Product Number Structure

Refer to the chart below when determining the product specifications from the product number.
Please select from the product numbers listed in this catalog when placing orders.

●Receptacle

FX 16 M2 - 51 S - 0.5 SH (**)
❶ ❷ ❸ ❹ ❺ ❻ ❼ ❿

●Plug

FX 16 M2 - 51 P - HC
❶ ❷ ❸ ❹ ❺ ❽

●Accessories (Cover shell)

FX 16 - 31 P - GND
❶ ❷ ❹ ❺ ❾

❶Series Name	: FX	
❷Series No.	: 16	
❸Shape designation	None/F/M2 : Hirose control identification code	
❹Number of positions		
❺Contact type	S P	: female contact : male contact
❻Contact pitch	0.5 None	: 0.5mm pitch : No contact
❼Product type (Receptacle)	SH SV	: right-angle type : vertical type
❽Product type(Plug)	SD SDL HC	: Right-angle batch cable assembly type (Micro coaxial cable) : Vertical batch cable assembly type (Micro coaxial cable) : FFC holder type
❾Product type (Accessories)	GND GNDL	: Right-angle type cover for micro coaxial cables : Vertical type cover for micro coaxial cables
❿Packaging	None (30)	: embossed tape package (1,000pcs/reel) : embossed tape package (100pcs/reel)

May.1.2024 Copyright 2024 HIROSE ELECTRIC CO., LTD. All Rights Reserved.

◆Transmission properties

●Differential impedance [Rise time: Tr=100ps]

A differential impedance of 100Ω ±10% is maintained at signal rise time of 100ps. (※Notes), This specification is met by way of an impedance-matching design based on SI simulation.

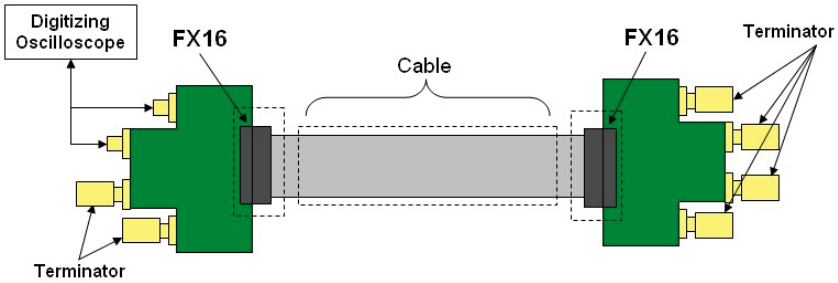

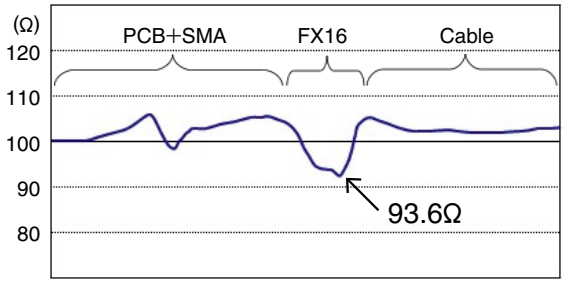

[Micro coax cable harness product]

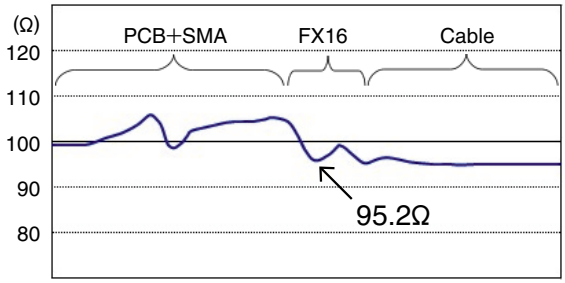

[Shielded FFC type harness product]

●Eye diagram

The FX16 Series connector shows outstanding performance at 3.75Gbps, the maximum speed of V-By-One® HS developed by Thine Electronics, Inc.

Testing with actual V-by-One® HS signals shows that the eye pattern is wide open at these signal speeds. (※Notes)

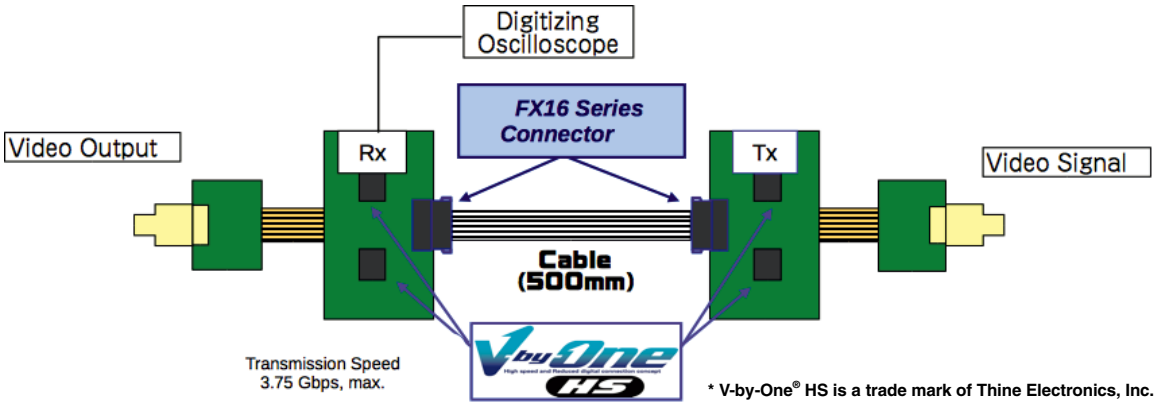

* V-by-One® HS is a trade mark of Thine Electronics, Inc.

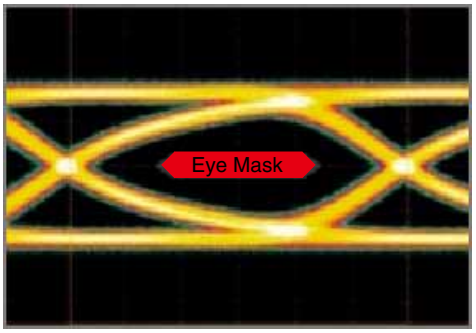

[Micro coax cable harness 500mm product]

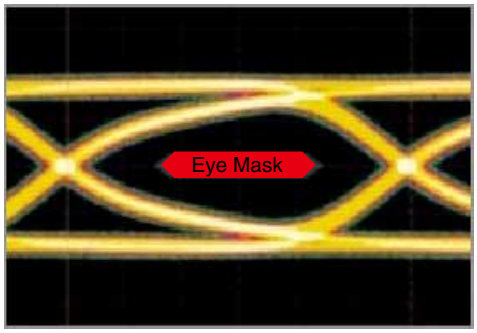

[Shielded FFC type harness 500mm product]

∗Note) Results may vary depending on the length and properties of the cables used.

May.1.2024 Copyright 2024 HIROSE ELECTRIC CO., LTD. All Rights Reserved.

◆Diagram of FX16 Series variations and mating table

Receptacle | **Plug** | **Additional Components** | **Cable Assemblies**

Right-angle type
(FX16-**S-0.5SH)

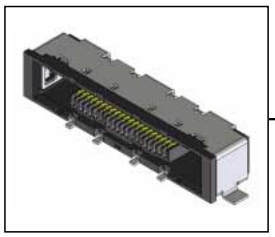

Vertical type
(FX16-**S-0.5SV)

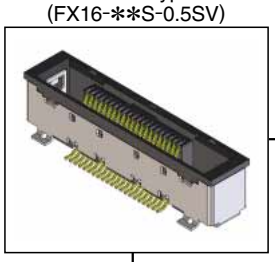

Right-angle batch cable assembly type
(FX16**-P-0.5SD)

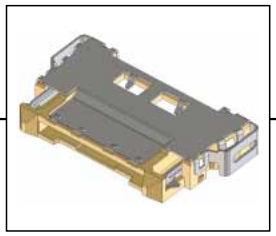

Ground Plate for micro coax cables
(FX16**-P-GND)

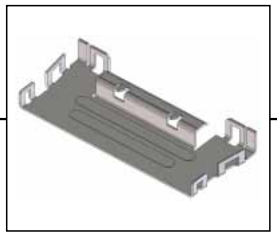

Micro coax cable assembly

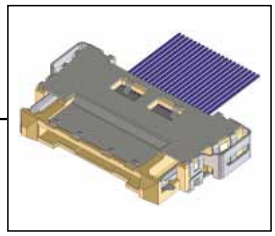

FFC cable Assembly

FFC holder type
(FX16**-P-HC)

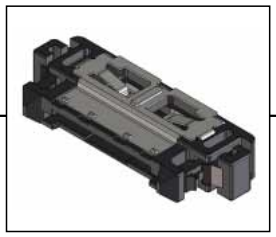

FFC holder type assembly

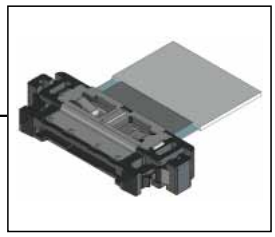

Vertical batch cable assembly type
(FX16**-P-0.5SDL)

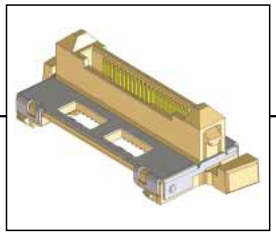

Ground plate for micro coax cables
(FX16**-P-GNDL)

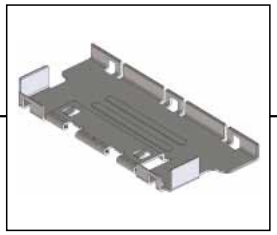

Micro coax cable assembly

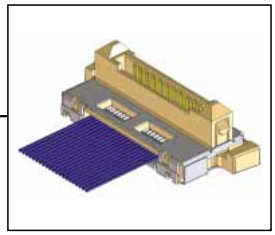

FFC batch assembly type

Right-angle type
(FX16M2-**S-0.5SH)

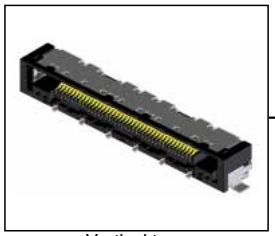

Vertical type
(FX16M2-**S-0.5SV)

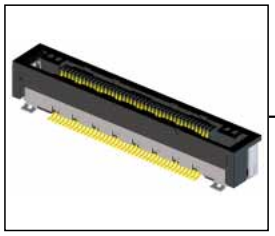

FFC holder type
(FX16M2**P-HC)

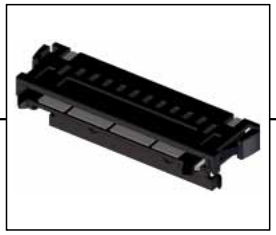

FFC holder type assembly

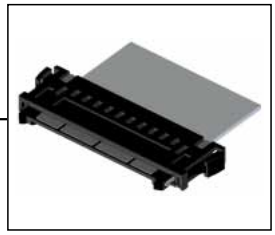

May.1.2024 Copyright 2024 HIROSE ELECTRIC CO., LTD. All Rights Reserved.

◆FX16 Series mating dimensions (Reference dimensions)

Receptacle | **Plug** | **Mated condition**

Right-angle, PCB mount type
(FX16-**S-0.5SH)

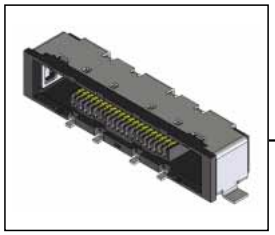

Right-angle type micro coaxial cable harness
(FX16**P-SD)

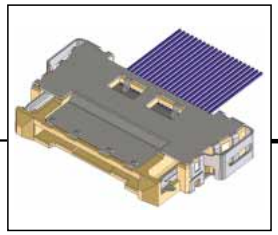

Vertical, PCB mount type
(FX16-**S-0.5SV)

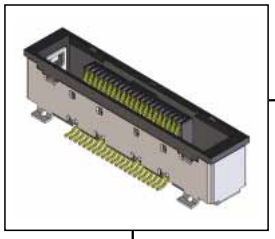

Holder FFC type assembly
(FX16**-P-HC)

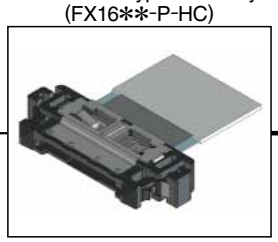

Vertical type micro coaxial cable harness
(FX16**-P-SDL)

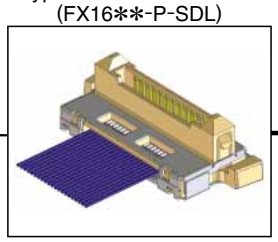

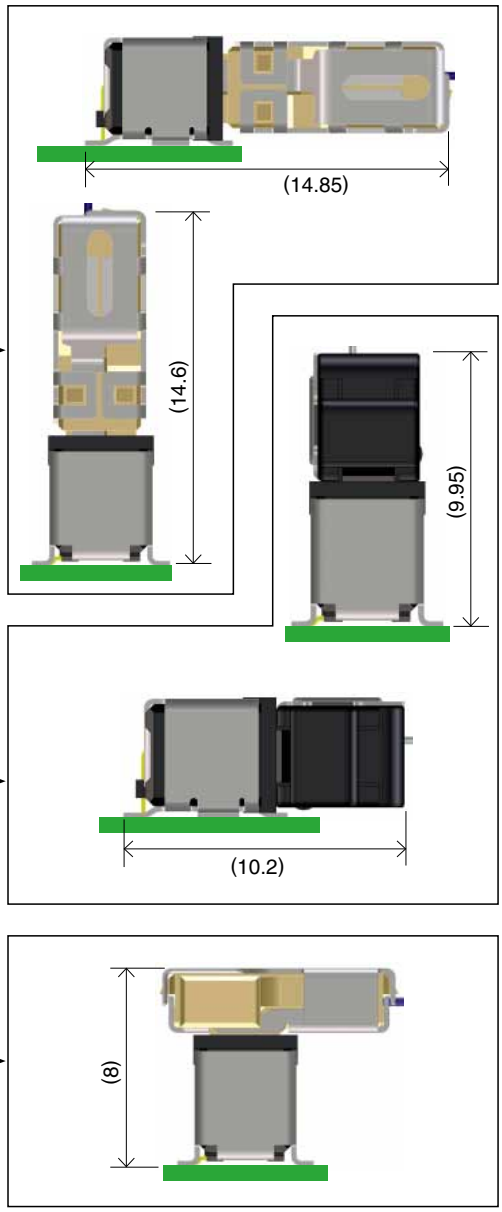

Right-angle, PCB mount type
(FX16M2-**S-0.5SH)

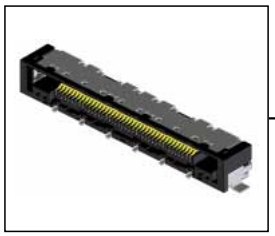

Vertical, PCB mount type
(FX16M2-**S-0.5SV)

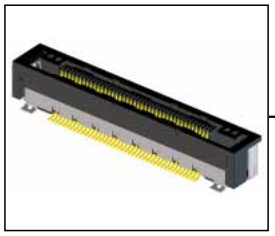

Holder FFC type assembly
(FX16M2-**-P-HC)

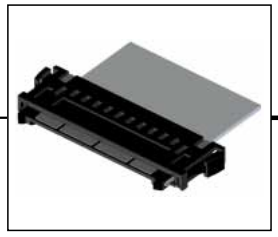

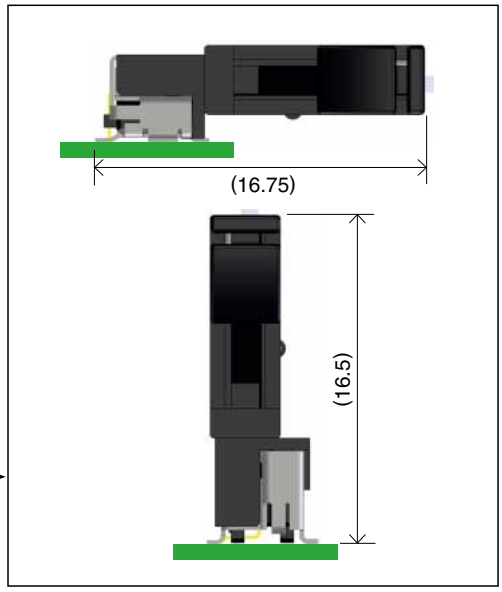

(Unit : mm)

May.1.2024 Copyright 2024 HIROSE ELECTRIC CO., LTD. All Rights Reserved.

■Receptacle

●Right-angle type (FX16-∗∗S-0.5SH)

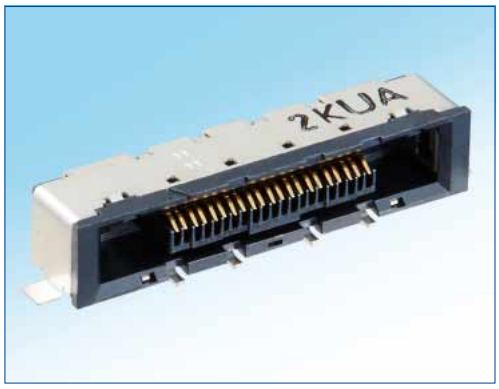

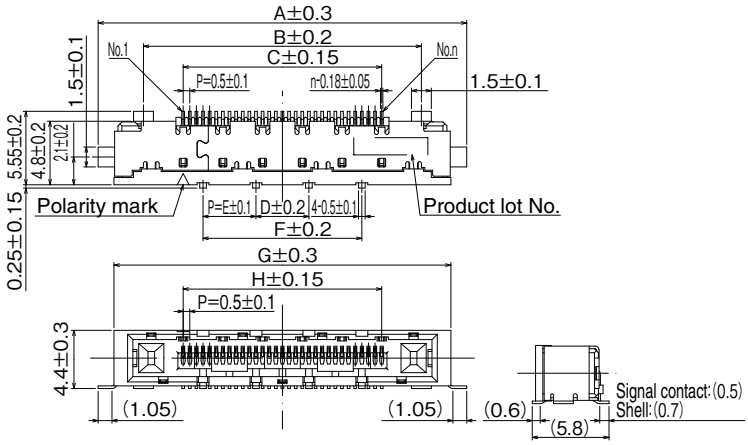

●Right-angle type (FX16M2-∗∗S-0.5SH)

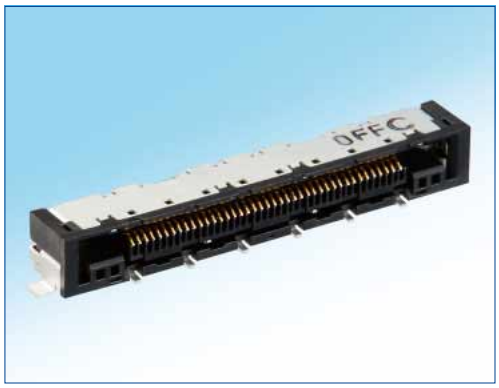

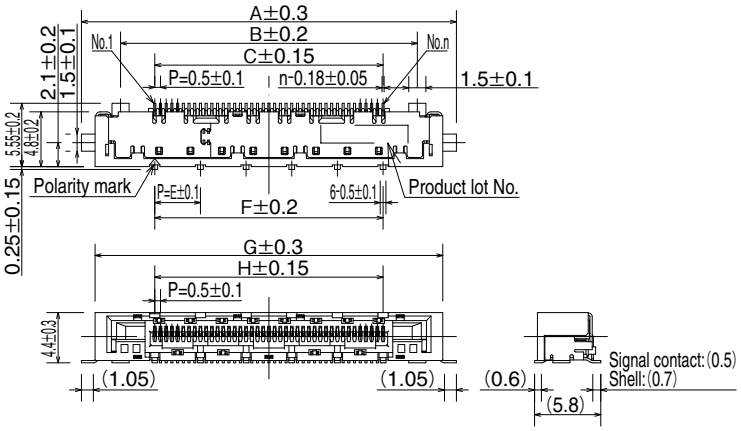

◆Recommended PCB layout (Metal mask dimension)

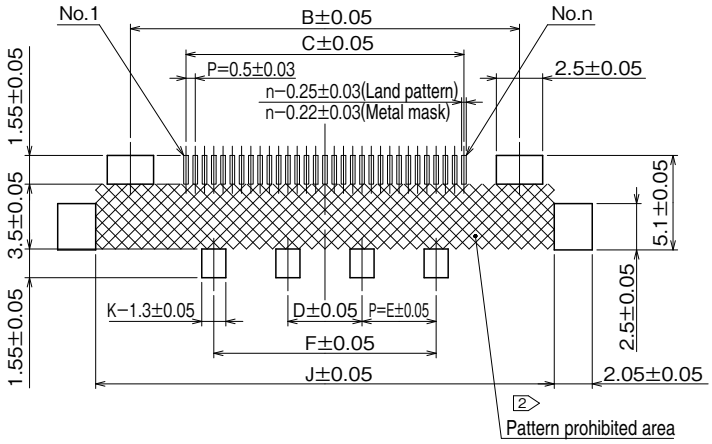

Notes:

1 The co-planarity of the contact and shell of this product is 0.1mm max.

2 Insulation measures such as the pattern prohibited area or resist processing are required in the area identified by ▨ inside the land pattern.

3 ( ) is a reference dimension.

4 During the manufacturing process, products may incur some minor cosmetic damage (dents/scratches), but this will not affect their performance.

5 This product is delivered in an embossed reel packaging; the packaged quantity for one reel is 1,000 pieces for standard articles (00) and 100 pieces for the specification of (30).

Unit : mm

Part No.	HRS No.	No. of Contacts (n)	A	B	C	D	E	F	G	H	J	K	RoHS
FX16-21S-0.5SH(∗∗)	575-3411-5 ∗∗	21	22.85	16	10	4	—	10	20.46	10	19.75	4	○
FX16-31S-0.5SH(∗∗)	575-3412-8 ∗∗	31	27.85	21	15	—	4	12	25.46	15	24.75		
FX16M2-41S-0.5SH(∗∗)	575-3003-9 ∗∗	41	32.85	26	20	—		20	30.46	20	29.75	6	
FX16M2-51S-0.5SH(∗∗)	575-3004-1 ∗∗	51	37.85	31	25	—	5	25	35.46	25	34.75		

(00) : Embossed package (1,000pcs/reel), (30) : Embossed package (100pcs/reel)

May.1.2024 Copyright 2024 HIROSE ELECTRIC CO., LTD. All Rights Reserved.

●Vertical type (FX16-∗∗S-0.5SV)

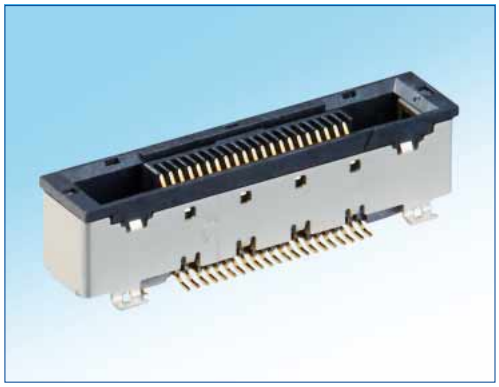

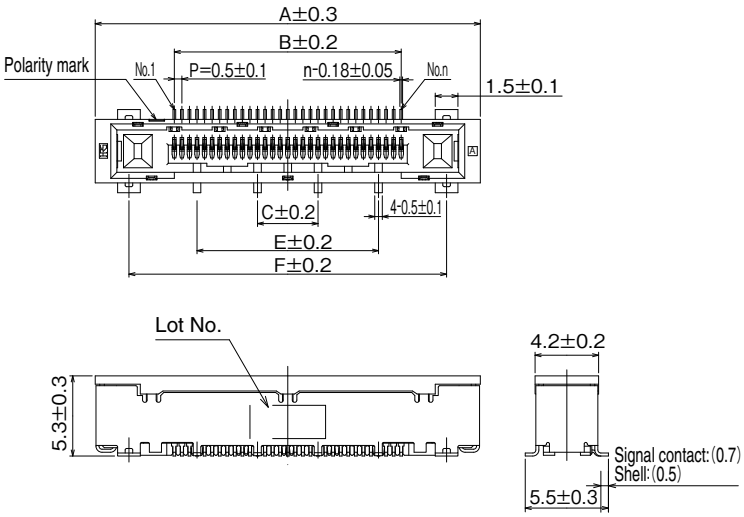

●Vertical type (FX16M2-∗∗S-0.5SV)

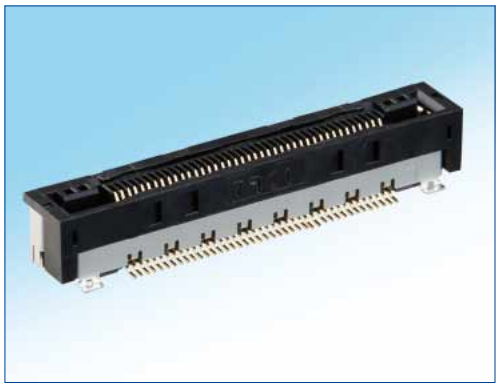

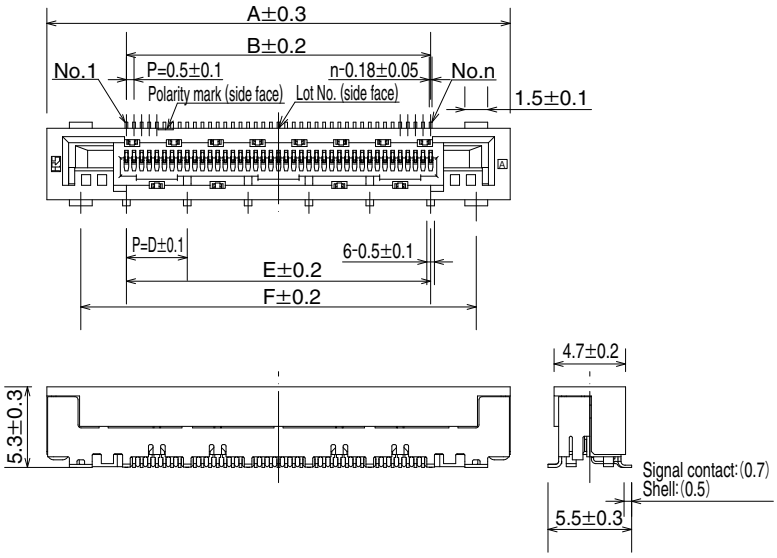

◆Recommended PCB layout (Metal mask dimension)

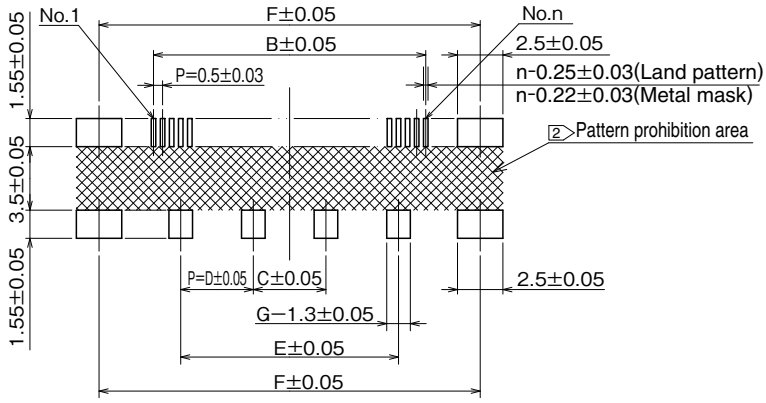

Notes :

1 The co-planarity of the contact and shell should measure no more than 0.1 (mm).

2 Insulation measures such as the pattern prohibited area or resist processing are required in the area identified by ▨ inside the land pattern.

3 ( ) is a reference dimension.

4 During the manufacturing process, products may incur some minor cosmetic damage (dents/scratches), but this will not affect their performance.

5 This product is delivered in an embossed package; the packaged quantity in one reel is 1,000 pieces for standard articles (00) and 100 pieces for the specification of (30).

Unit : mm

Part No.	HRS No.	No. of Contacts (n)	A	B	C	D	E	F	G	RoHS
FX16-21S-0.5SV(∗∗)	575-3401-1 ∗∗	21	20.46	10	4	-	10	16	4	○
FX16-31S-0.5SV(∗∗)	575-3402-4 ∗∗	31	25.46	15	-	4	12	21		
FX16M2-41S-0.5SV(∗∗)	575-3002-6 ∗∗	41	30.46	20	-		20	26	6	

(00) : Embossed package (1,000pcs/reel), (30) : Embossed package (100pcs/reel)

May.1.2024 Copyright 2024 HIROSE ELECTRIC CO., LTD. All Rights Reserved.

◆Emboss carrier dimensions (receptacles only)

●Horizontal type (FX16-∗∗S-0.5SH / FX16M2-∗∗S-0.5SH)

Unit : mm

Part No.	HRS No.	No. of Contacts (n)	A	B	C	D	W
FX16-21S-0.5SH(∗∗)	575-3411-5 ∗∗	21	44	40.4	20.2	23.76	44.5
FX16-31S-0.5SH(∗∗)	575-3412-8 ∗∗	31				28.76	
FX16M2-41S-0.5SH(∗∗)	575-3003-9 ∗∗	41	56	52.4	26.2	33.76	56.5
FX16M2-51S-0.5SH(∗∗)	575-3004-1 ∗∗	51				38.76	

(00) : Embossed package (1,000pcs/reel), (30) : Embossed package (100pcs/reel)

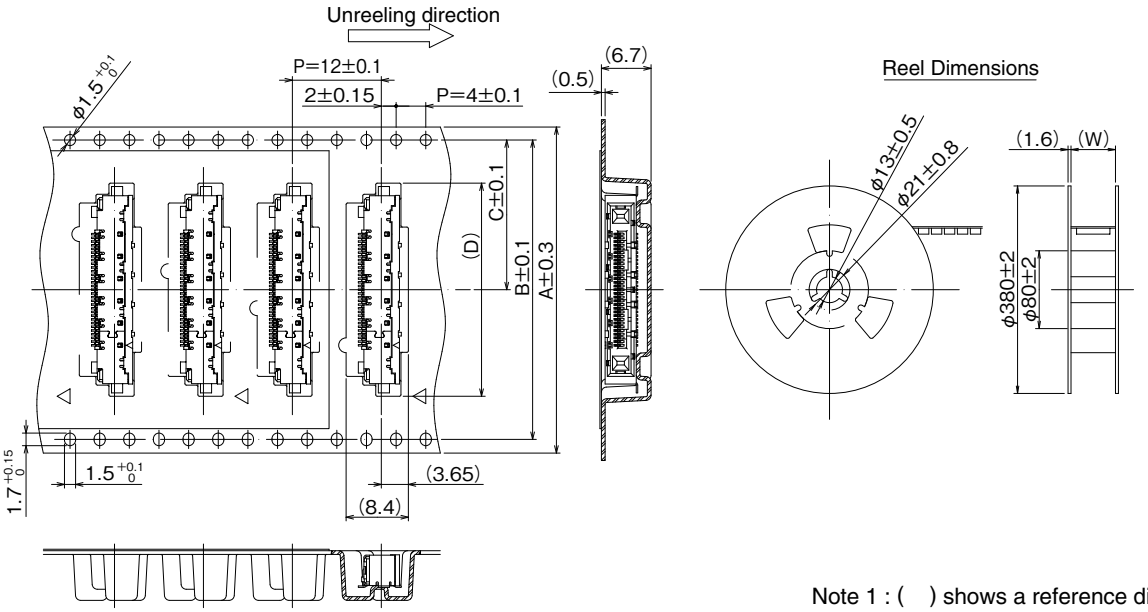

Note 1 : (　) shows a reference dimension.

●Vertical type (FX16-∗∗S-0.5SV / FX16M2-∗∗S-0.5SV)

Unit : mm

Part No.	HRS No.	No. of Contacts (n)	A	B	C	D	E	W
FX16-21S-0.5SV(∗∗)	575-3401-1 ∗∗	21	44	40.4	20.2	20.57	6.9	44.5
FX16-31S-0.5SV(∗∗)	575-3402-4 ∗∗	31				25.57		
FX16M2-41S-0.5SV(∗∗)	575-3002-6 ∗∗	41				30.57	7	

(00) : Embossed package (1,000pcs/reel), (30) : Embossed package (100pcs/reel)

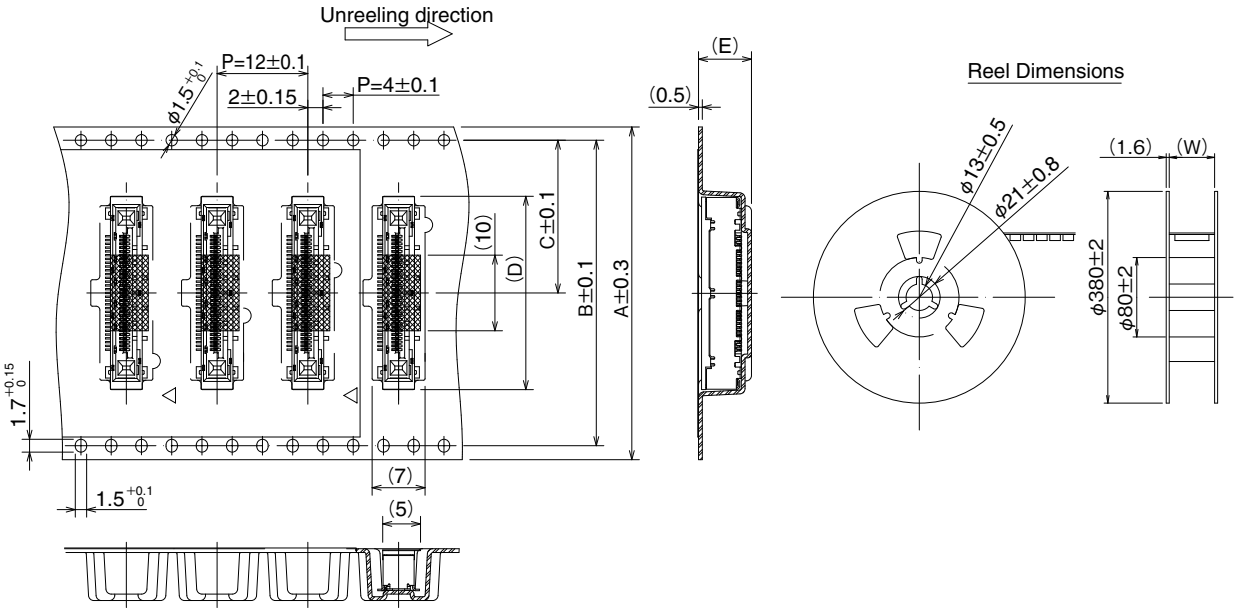

Note 1 : (　) shows a reference dimension.

May.1.2024 Copyright 2024 HIROSE ELECTRIC CO., LTD. All Rights Reserved.

◆Recommended Temperature Profile

This temperature profile is a reference based on the following conditions. Since your actual conditions may vary, please check your process before mounting the connectors.

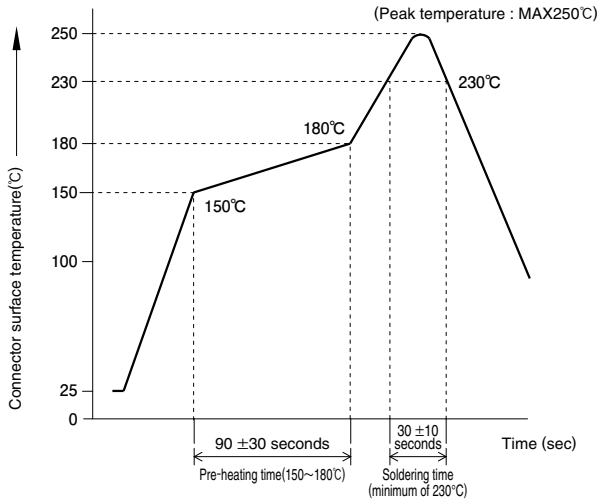

(Applicable Conditions)

Test PCB Dimensions : 40×30×1(mm)
Reflow method Material : glass epoxy
Solder Composition : Sn-3 Ag-0.5 Cn (flux component : 10.5wt%)
Metal mask thickness : 0.12mm

Note 1 : This temperature profile is a recommended value.
Note 2 : The reflow process should not be conducted more than two times.
Note 3 : The values may show a slight variance due to solder paste type and thickness.

◆Cleaning Conditions

Cleaning with organic solvents

Solvent	Clean at normal temperature	Heated cleaning
IPA (Isopropyl alcohol)	○	○

Water cleaning

If wet cleaning is necessary, please select the proper cleaning agent (terpene, alkali saponification agent etc.) based on the reaction it will have on the metals and resins of the connector. This information is issued by the manufacturer of the cleaning agent. Additionally, please make sure not to apply an excessive amount of the cleaning agent.

Points to note during cleaning

When using organic solvents or wet cleaning agents, please ensure proper rinsing is done to eliminate the possibility of deterioration in electrical performance caused by flux or cleaning agents remaining in the connector.

May.1.2024 Copyright 2024 HIROSE ELECTRIC CO., LTD. All Rights Reserved.

■Plug

●Right-angle batch cable assembly type

Unit : mm

Part No.	HRS No.	No. of Contacts (n)	A	B	C	D	RoHS
FX16-21P-0.5SD	575-3301-7	21	21.9	19.6	17.57	10	○
FX16-31P-0.5SD	575-3302-0	31	26.9	24.6	22.57	15	

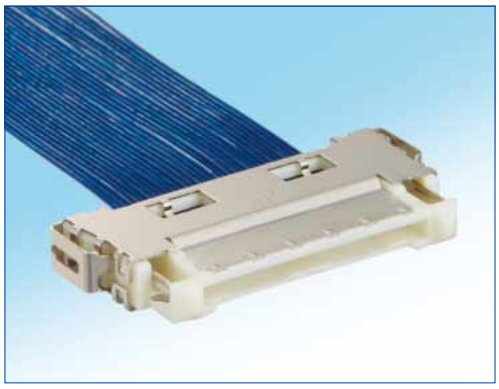

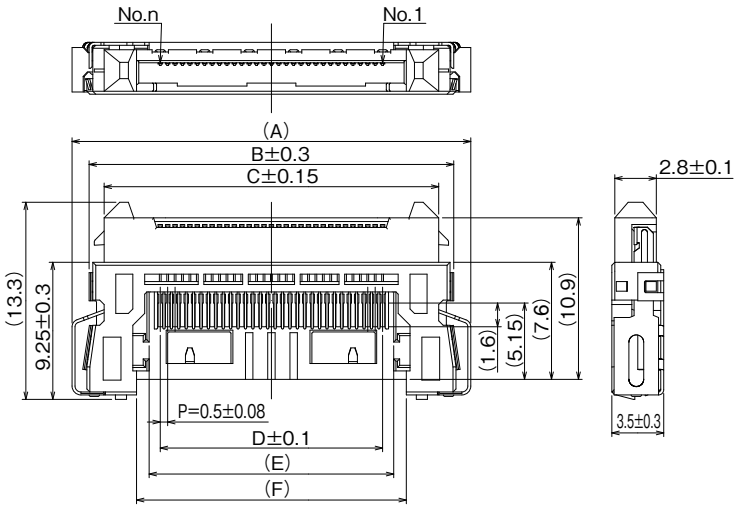

Notes :
1. ( ) shows a reference dimension.
2. During the manufacturing process, products may incur some minor cosmetic damage (dents/scratches) or black spots in the resin, but these small imperfections will not affect their performance.
3. This product is delivered in a tray package.

●Right-angle-type cover shell for micro axial cables

Unit : mm

Part No.	HRS No.	No. of Contacts (n)	A	B	C	RoHS
FX16-21P-GND	575-3311-0	21	19.2	13.2	20.06	○
FX16-31P-GND	575-3312-3	31	24.2	18.2	25.06	

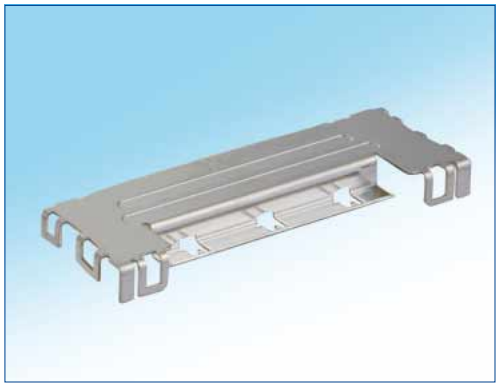

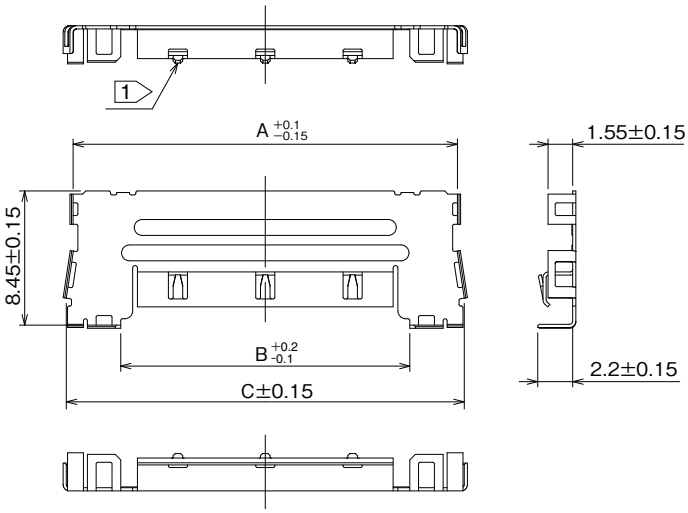

Notes :
1. During the manufacturing process, products may incur some minor cosmetic damage (dents/scratches), but this will not affect their performance.
2. This product is delivered packaged on a 2500pcs/reel.
3. This product is an accessory to the separately sold item "Right angle batch cable connection type plug (FX16-∗∗P-0.5SD)". Please be sure to use them together.

May.1.2024 Copyright 2024 HIROSE ELECTRIC CO., LTD. All Rights Reserved.

●Vertical batch cable connection type

Unit : mm

Part No.	HRS No.	No. of Contacts (n)	A	B	C	D	E	F	RoHS
FX16-21P-0.5SDL	575-3321-4	21	18.07	13.7	11.5	10	23.6	17.57	○
FX16-31P-0.5SDL	575-3322-7	31	23.07	18.7	16.5	15	28.6	22.57	

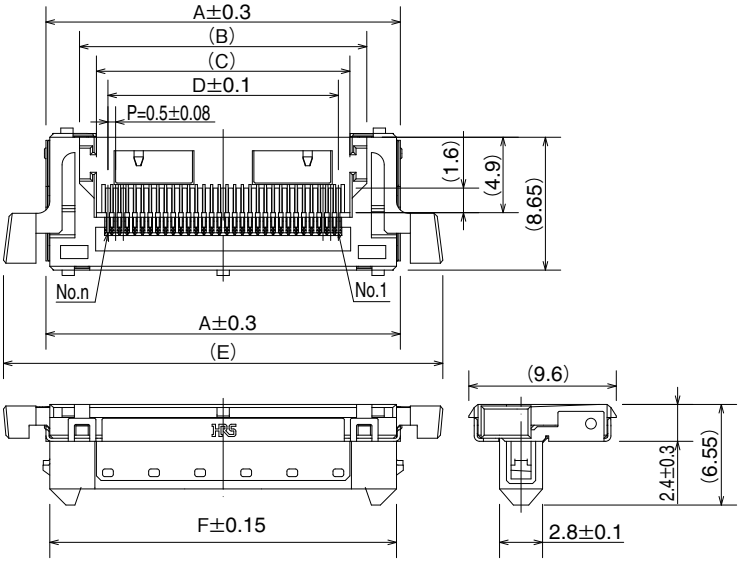

Notes :
1. ( ) shows a reference dimension.
2. During the manufacturing process, products may incur some minor cosmetic damage (dents/scratches) or black spots in the resin, but these small imperfections will not affect their performance.
3. This product is delivered in a tray package.

●Vertical type cover shell for micro coaxial cables

Unit : mm

Part No.	HRS No.	No. of Contacts (n)	A	B	C	RoHS
FX16-21P-GNDL	575-3331-8	21	20.37	11.47	18.17	○
FX16-31P-GNDL	575-3332-0	31	25.37	16.47	23.17	

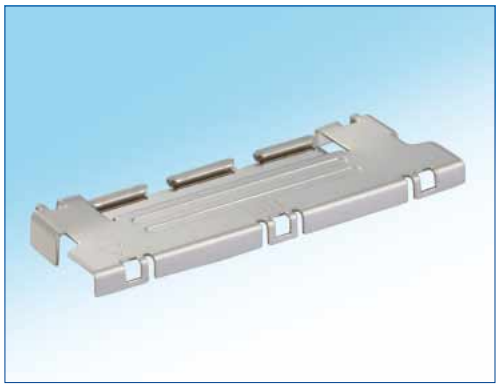

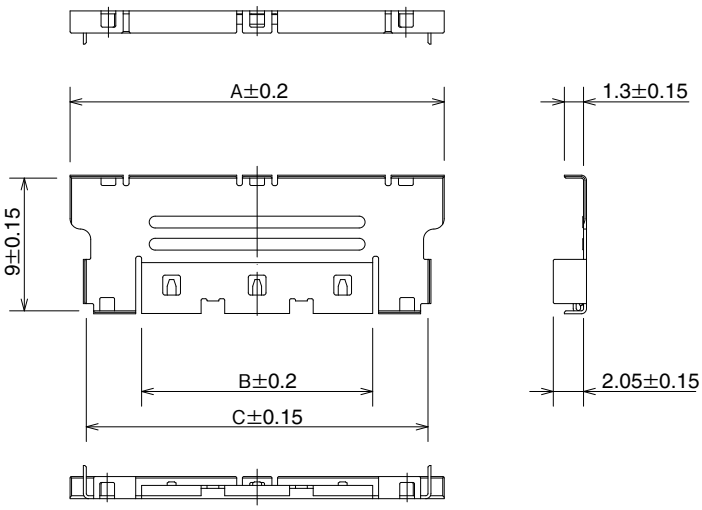

Notes :
1. During the manufacturing process, products may incur some minor cosmetic damage (dents/scratches), but this will not affect their performance.
2. This product is delivered packaged on a 2000pcs/reel.
3. This product is a compliment to the separately sold item "vertical batch cable assembly type plug (FX16-∗∗P-0.5SDL)". Please be sure to use them together.

May.1.2024 Copyright 2024 HIROSE ELECTRIC CO., LTD. All Rights Reserved.

◆Applicable wires

●Micro coaxial cables

Applicable conductor size (core structure)	Insulation diameter
36 AWG# (7pcs/0.05mm)	ϕ0.3～ϕ0.5mm
38 AWG# (7pcs/0.04mm)	
40 AWG# (7pcs/0.03mm)	

No. of Contacts (n)	Applicable connectors	A	B	C
21	FX16-21P-0.5SD	13.1	10	4.55
	FX16-21P-0.5SDL			4.3
31	FX16-31P-0.5SD	18.1	15	4.55
	FX16-31P-0.5SDL			4.3

Recommended micro coaxial cable dimensions

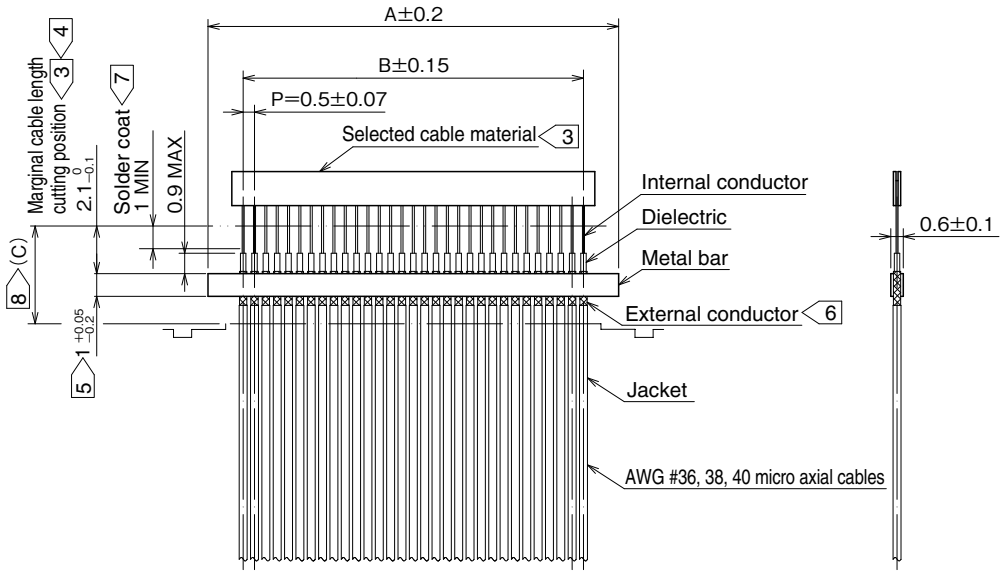

Notes :

1 ( ) shows a reference dimension.

2 Pulse heat batch soldering is recommended to affix the harness to the connector

3 To prevent any conductor deformation prior to harnessing, please use the cable material immediately after cutting

4 After confirming that the soldered state has no problems, departure from recommended values is permissible

5 Use of out-of-spec dimension cables may hinder the correct attachment to the connector. Additionally, use of excessive force during cable connection may cause faults such as unsoldered areas and disconnects.

6 The protrusion of the external conductor from the metal bar should be minimized.

7 Apply a solder coat (pre-tinning) on the internal conductor.

8 Shows the position at which the connector should be connected and the cable inserted into the connector when the cable has been stripped at the recommended length.
If cable is stripped at a different length, the amount of cable insertion will need to be changed as well.

May.1.2024 Copyright 2024 HIROSE ELECTRIC CO., LTD. All Rights Reserved.

●FFC holder type (FX16F-∗∗P-HC)

Unit : mm

Part No.	HRS No.	No. of Contacts (n)	A	B	C	RoHS
FX16F-21P-HC	575-3265-5	21	22.4	17.57	20.4	○
FX16F-31P-HC	575-3266-8	31	27.4	22.57	25.4	

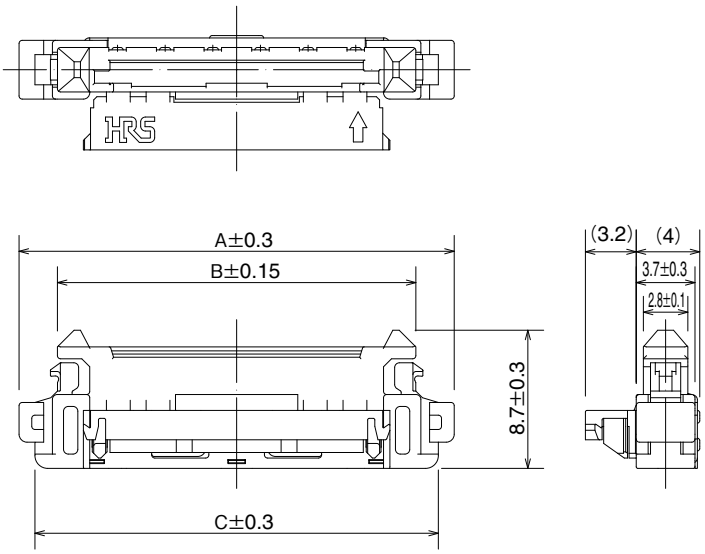

Notes :
1. ( ) shows a reference dimension.
2. During the manufacturing process, products may incur some minor cosmetic damage (dents/scratches). But this will not affect their performance. Additionally there may be mold sinks present.
3. This product is delivered in a tray package.

●FFC holder type (FX16M2-∗∗P-HC)

Unit : mm

Part No.	HRS No.	No. of Contacts (n)	A	B	RoHS
FX16M2-41P-HC	575-3262-7	41	35.4	27.57	○
FX16M2-51P-HC	575-3263-0	51	40.4	32.57	

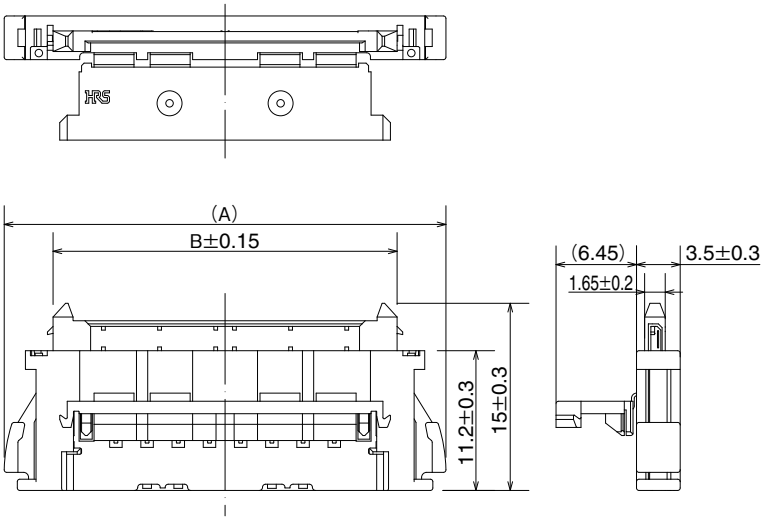

Notes :
1. ( ) shows a reference dimension.
2. During the manufacturing process, products may incur some minor cosmetic damage (dents/scratches), but this will not affect their performance. Additionally there may be mold sinks present.
3. This product is delivered in a tray package.

May.1.2024 Copyright 2024 HIROSE ELECTRIC CO., LTD. All Rights Reserved.

◆Applicable wires

●Completely shielded FFC for holder type

Unit : mm

No. of Contacts (n)	Applicable connectors	A	B	C	D	E	F
21	FX16F-21P-HC	13.2	12.8	11.2	10	12.8	10.7
31	FX16F-31P-HC	18.2	17.8	16.2	15	17.8	15.7

Recommended FFC dimensions

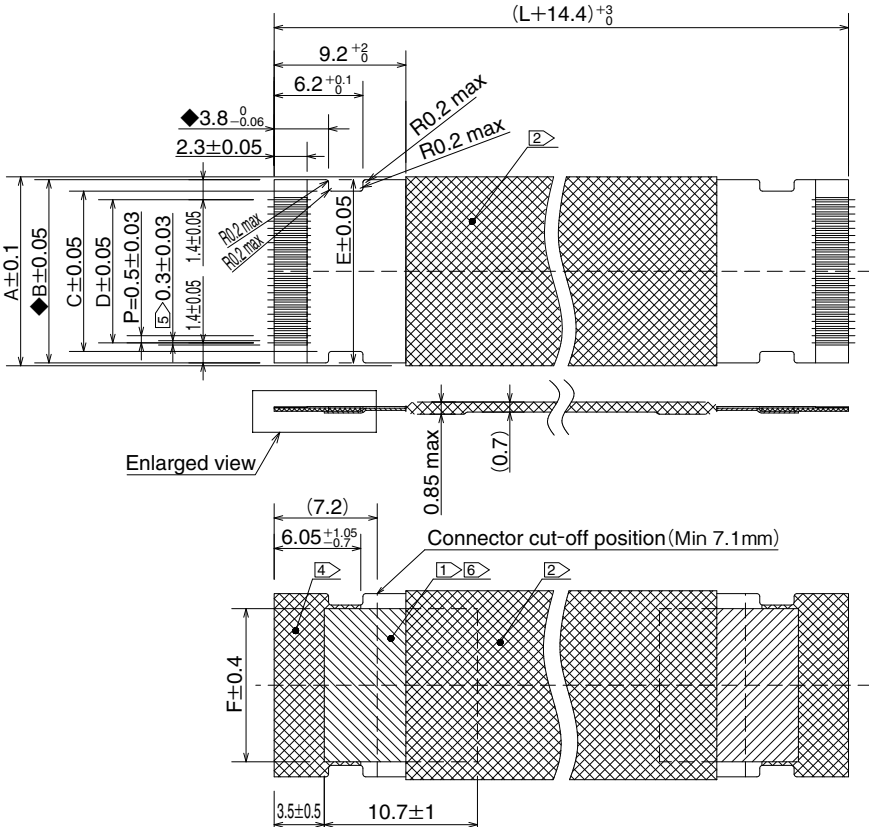

Enlarged view

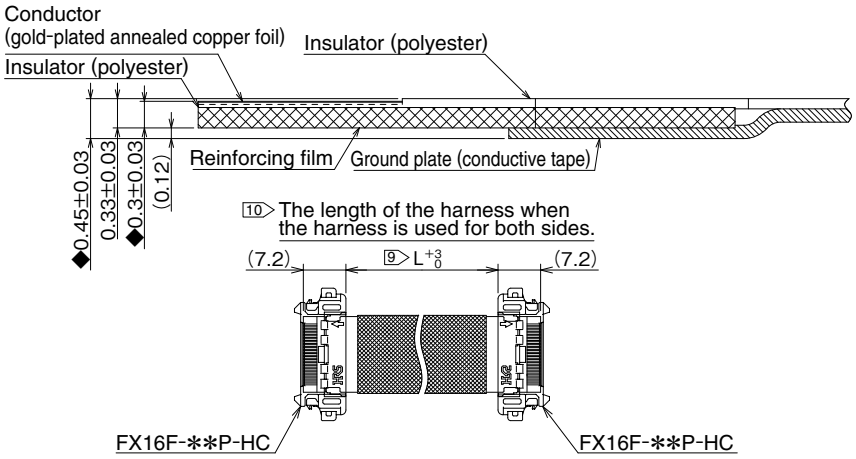

Notes :

1 The plating on the ground plate (tape) must be at least 1.5μm of Sn plating, with the first 1 to 5μm of Ni plating + at least 0.2μ of Au plating on the pad surface as well as C-2000-equivalent sealing.

2 denotes the shielded area. (both sides are shielded).

3 denotes the area for the ground plate (conductive tape).

4 denotes the area for the reinforcing film.

5 The width of the conductor must be 0.3 ±0.03mm.

6 The ground plate (tape) and shield must overlap each other. This will allow a conductive path to be established through both ground plates and on both sides.

7 FFC must be made to satisfy the differential impedance value of 100Ω ±7%.

8 ( ) denotes the reference dimension and ◆ mark denotes important dimensions.

9 The L dimension is the length of the harness from one end face to the other end face of the connector cable port.

May.1.2024 Copyright 2024 HIROSE ELECTRIC CO., LTD. All Rights Reserved.

●Completely shielded FFC for holder type

Unit : mm

No. of Contacts (n)	Applicable connectors	A	B	C	D	E	F
41	FX16M2-41P-HC	24.4	23	21.2	20	23.5	20.7
51	FX16M2-51P-HC	29.4	28	26.2	25	28.5	25.7

Recommended FFC dimensions

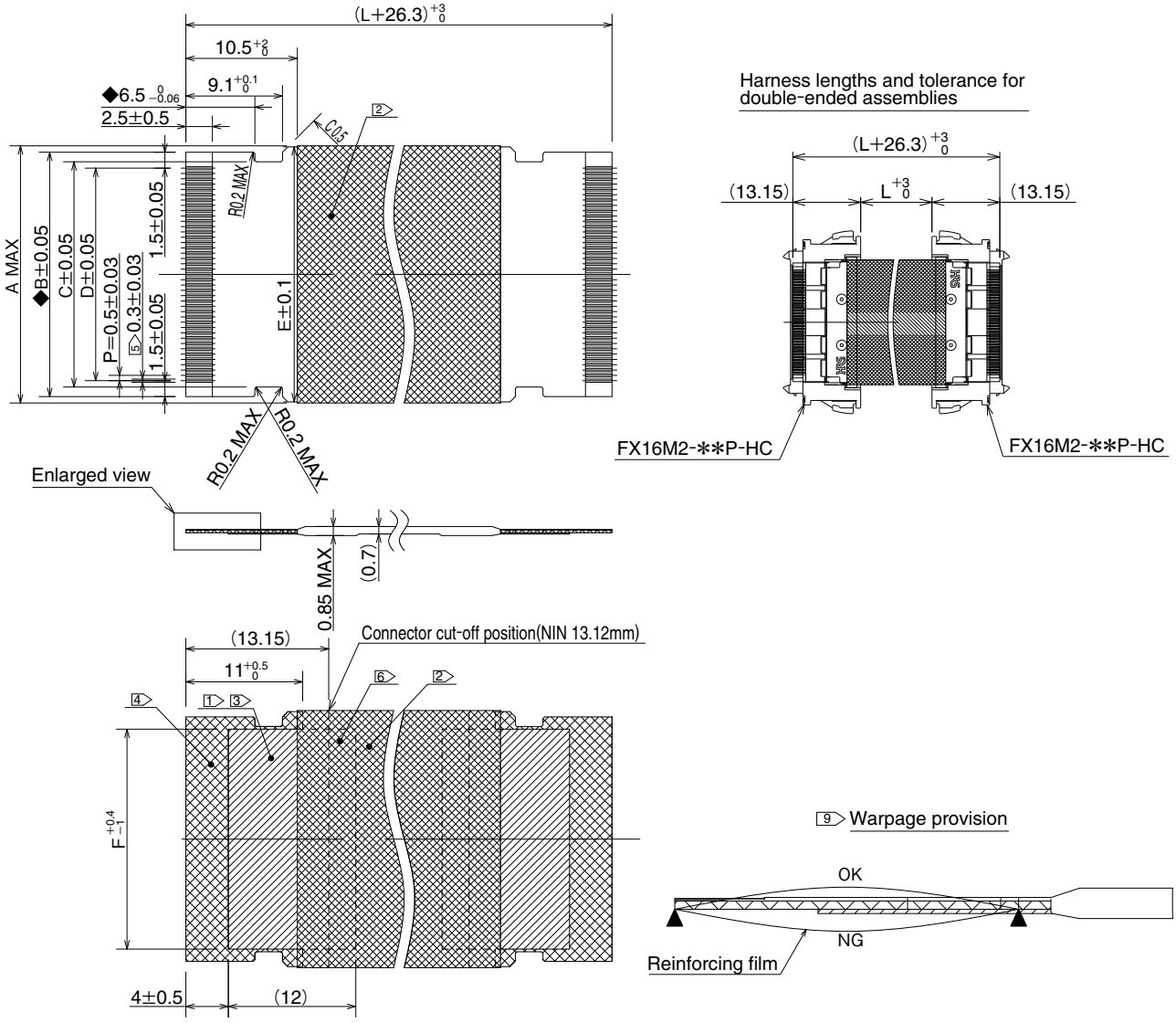

Enlarged view

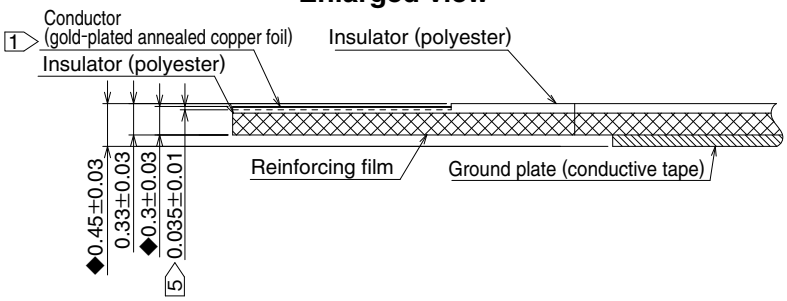

Notes :

1 The plating on the grounding plate (tape) must be at least 1.5μm of Sn plating, with the first 1 to 5μm of Ni plating + at least 0.2μ of Au plating on the pad surface as well as C-2000-equivalent sealing.

2 denotes the shielded area. (both sides are shielded).

3 denotes the area for the ground plate (conductive tape).

4 denotes the area for the reinforcing film.

5 The width of the conductor must be 0.3 ±0.03mm.

6 The ground plate (tape) and shield must overlap each other. This will allow a conductive path to be established through both ground plates and on both sides.

7 The manufacturing work should be directed to ensure that the FFC is made to satisfy a differential impedance value of 100Ω ±7%.

8 ( ) denotes the reference dimension and ◆ mark denotes important dimensions.

9 Warpage of the reinforcing film is permitted only in the direction of OK in reference to ▲▲ on both sides. However, please make sure that the film can still be inserted into the connector without any problems.

May.1.2024 Copyright 2024 HIROSE ELECTRIC CO., LTD. All Rights Reserved.

Precautions of use

◆Plug (Vertical/horizontal batch cable connection type)

[Precautions for soldering]

[1] Recommended soldering iron
Wire solder with flux (lead-free type: Sn-3Au-0.5Cu)
When using micro coax cables……ϕ0.15 Length : number of pos. ×0.5mm
Be careful not use an excessive amount of flux, especially when using a wire solder that contains flux. Doing so may cause the flux to run up to the contact portion which can lead to contact failure.

[2] Prior to fixing the cables to the connector, make sure that the conductor is placed correctly in the center of the contact.
Fix the cable at the metal bar guide on the connector.

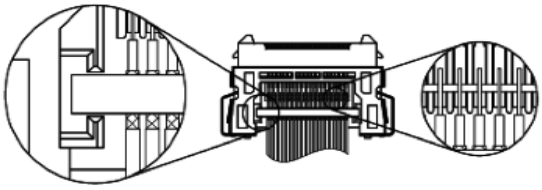

[3] Before you solder down the cables onto the connector, please check for the following issues :
・Deformation of the conductor
・Pitch deviations to the conductor relative to the contact
・Extreme uplift of the conductor tip end
This feature can lead to unsoldered spaces or solder bridges.

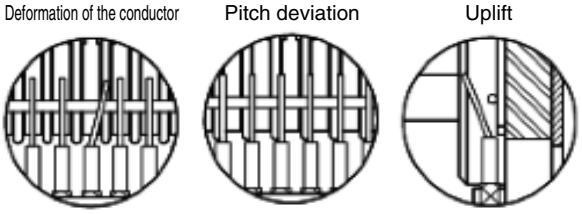

[4] Recommended pulse heat conditions
Conditions will vary depending on the length/type of cable used, type of solder, etc…
Please reference the recommended profile conditions when setting up your working conditions.

Pressure on the iron tip	13-17N

Main heating

Temperature (Y)	275±5℃
Hold time (X)	2 ±0.5 seconds

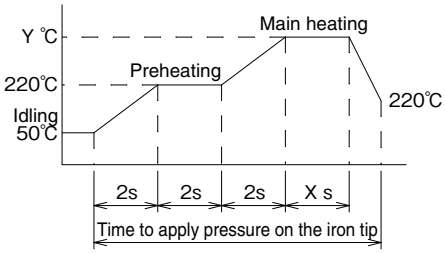

[5] Please check the soldered part after soldering to ensure no deformities were made. The illustrations below depict some examples of correct parts and some examples of incorrectly soldered parts.

Example of a correctly soldered part

The conductor is located at the center of the contact, and the whole area is uniformly soldered.

Examples of incorrectly soldered parts

Solder bridge | Insufficient amount of solder used | Scattered solder balls

Floating | Uplift of the conductor | The conductor is located too close to the extended contact.

May.1.2024 Copyright 2024 HIROSE ELECTRIC CO., LTD. All Rights Reserved.

Precautions of use

[Precautions for resin sealing]

[1] To prevent insulation failure due to foreign materials, cable disconnection during the routing of the cable and other failures, we recommend that the soldered area be protected with an ultraviolet curable resin or another equivalent material. Recommended resin sealing material : Ultraviolet curable resin 3033 manufactured by ThreeBond Co., Ltd.

[2] Please refer to the resin manufacturer's directions for recommended usage conditions.

[3] Ensure that the complete soldering area of the conductor is covered with resin. Be careful not to let the applied resin flow into or stick to the connector contacts.

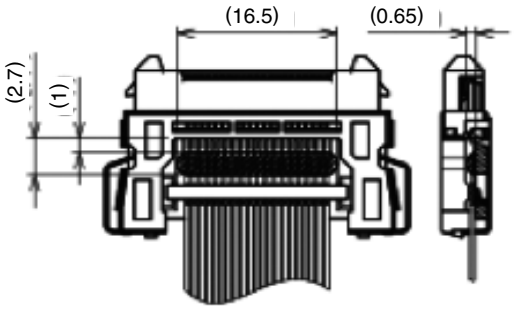

[4] Please pay close attention to the load (e.g. tension, stress.) placed on the soldered part after soldering. Poor handling could cause cable disconnection.

[How to mount the cover shell]

[1] After connecting the cables, mount the separately sold cover shell (for micro coax cables : FX16-31P-GND).

[2] Place the cover shell over the connector from above, set it on the connector while holding it with your fingers.

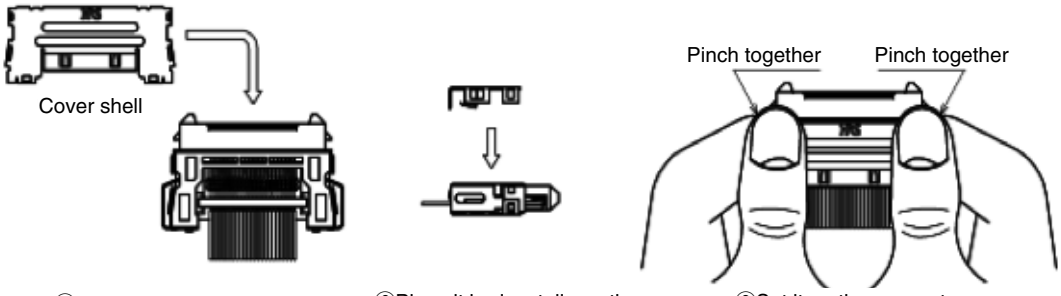

①Prepare the cover shell.

②Place it horizontally on the connector from above.

③Set it on the connector and pinch it down

[3] After applying it to the connector, check to see if all six "joining point" locations are correctly in place.

Illustration showing proper joining

(cross-section of the joining point).

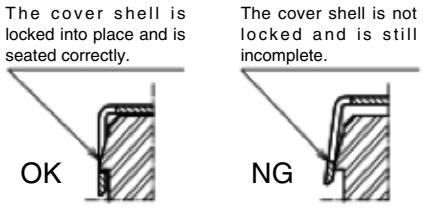

May.1.2024 Copyright 2024 HIROSE ELECTRIC CO., LTD. All Rights Reserved.

Precautions of use

[Ground soldering of the connector to the cable]

[1] Soldering the metal bar of the cable and the connector shell will enhance the shielding properties and provide additional cable strain relief.

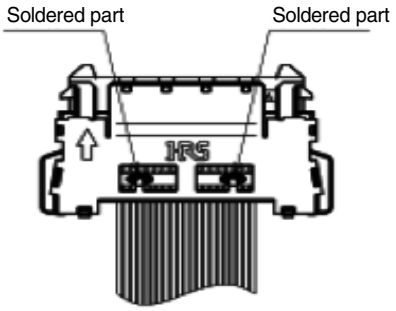

[2] Do not apply too much solder as this can lead to deformation/melting of the cable/connector due to the heat generated while soldering.

◆Plug (FFC holder type)

[Precautions during harness work]

[1] Inserting FFC

Insert the FFC straight along the guide rib of the mold, as shown in the following figure.
It cannot be inserted in different directions.
Please be careful not to deform FFC or damage the case or spring contact.

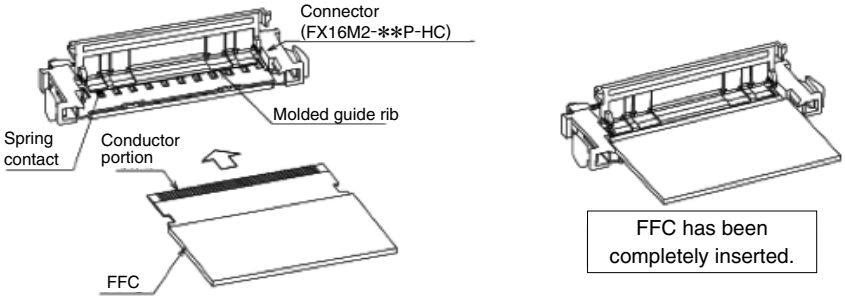

[2] Confirming the insertion of the FFC

Check if the FFC has been inserted correctly by observing the tip end of the FFC from above the connector.
∗ If the FFC was inserted correctly, the tip of the FFC will meet up with the wall of the connector.

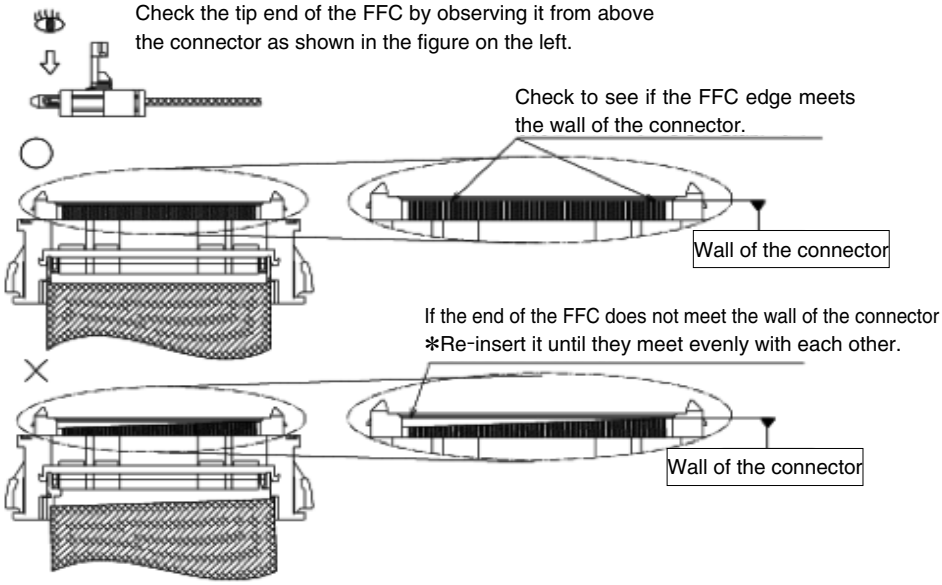

May.1.2024 Copyright 2024 HIROSE ELECTRIC CO., LTD. All Rights Reserved.

Precautions of use

[3] Fixing the FFC

As shown in the figure below, hold the connector in both hands and push the lock straight with both thumbs.
At this time, verify the hooks are tightly attached to each other on both sides.
Additionally, after closing the lock, verify that the FFC cannot be easily pulled out, and that the hooks on both sides are tightly attached to each other by holding both ends of the assembly and pulling the FFC in the drawing direction with a force of 3 to 5 N

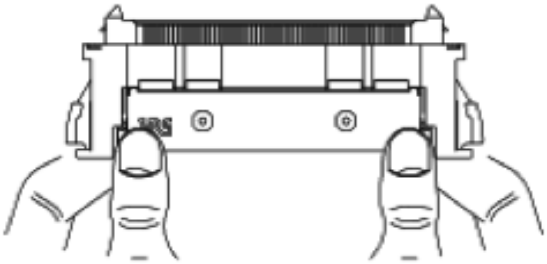

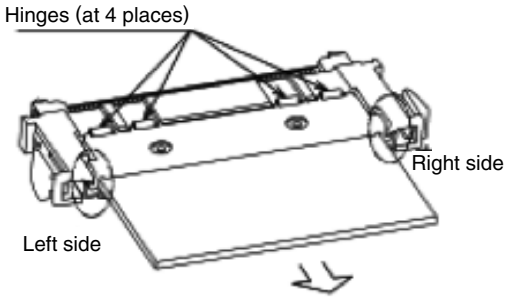

Check to see that the FFC cannot be pulled out with a force of 3 to 5 N.

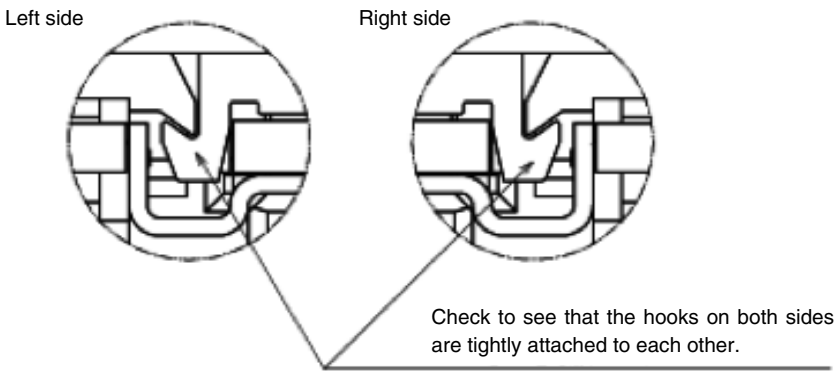

[4] Other cautions

①From the time of opening the package until the assembly process, please do not handle the product in the manner which will cause the lock of the connector to be pushed down.
If the lock gets deflected it in the direction shown in the figure below, discard the connector.

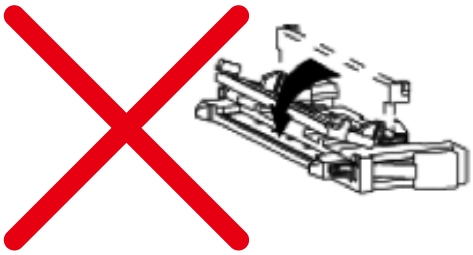

②Once FFC has been removed from the connector, do not reuse the connector.
③At the time of packing the harness, be careful not to let the connector be damaged or deformed.

May.1.2024 Copyright 2024 HIROSE ELECTRIC CO., LTD. All Rights Reserved.

Precautions of use

◆General cautions

[Cautions for handling]

[1] Insertion into the connector on the side of PCB

The mating direction of this connector has been specified. Mating should be done with the mark facing the direction shown in the figure below.

Additionally, insertion should be done until the locks on both sides are set.

PCB side: FX16M2-**S-0.5SH

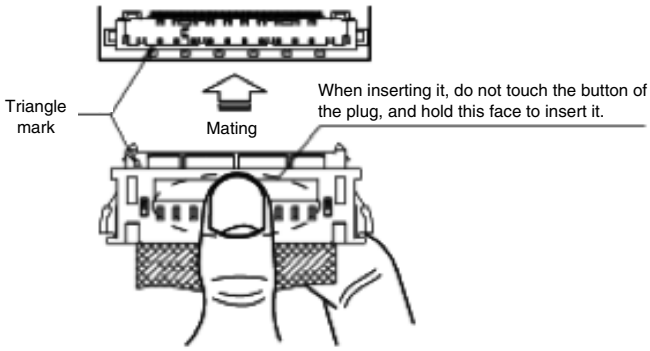

Although this connector is designed to prevent reverse insertion, the connector could be damaged if it were mated forcibly with a force exceeding 25 N. Avoid forced mating, and please verify the triangle mark position before mating.

Do not pull it out at an angle as shown in the figure below. This could damage the connector.

[2] Unmating the connector mounted on a PCB

This connector is structured to lock on both ends when mated.

When unmating the connector, pull it out straight while pushing on both sides with your fingers to unlock it.

Please do not pull out FFC with a strong force.

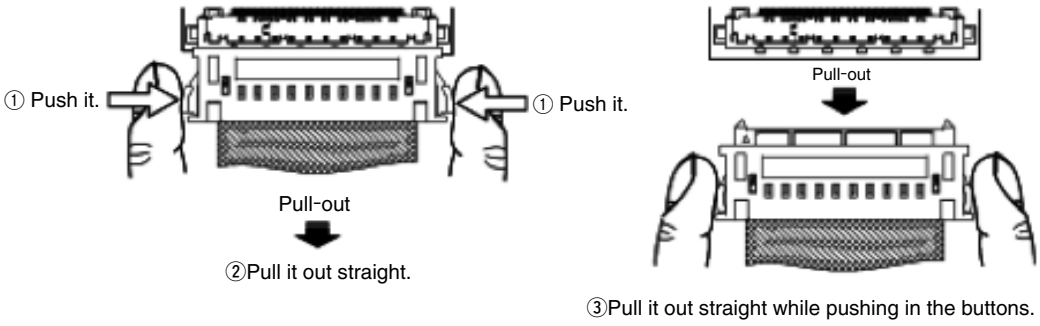

Do not pull it out at an angle as shown in the figure below. This could damage the connector.

〈Incorrect insertion method〉

May.1.2024 Copyright 2024 HIROSE ELECTRIC CO., LTD. All Rights Reserved.

Precautions of use

〈**Incorrect pull-out method**〉

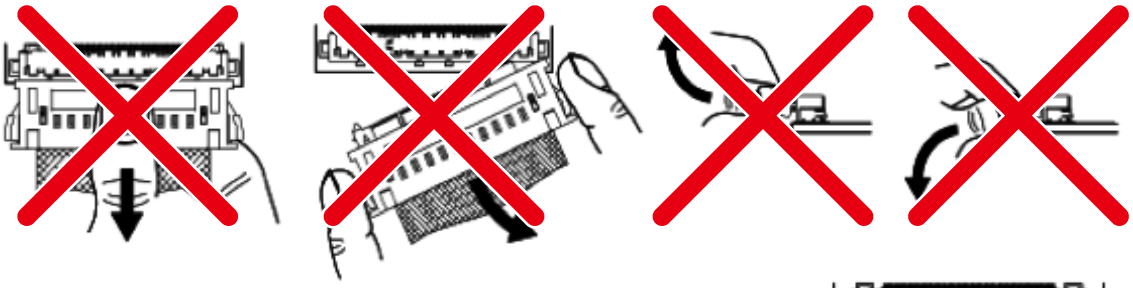

[3] In the case when the connector has been unmated forcibly.
If the connector has been unmated forcibly, push it back once to the completely mated condition, from this state, pull the plug by the "correct pull-out method".

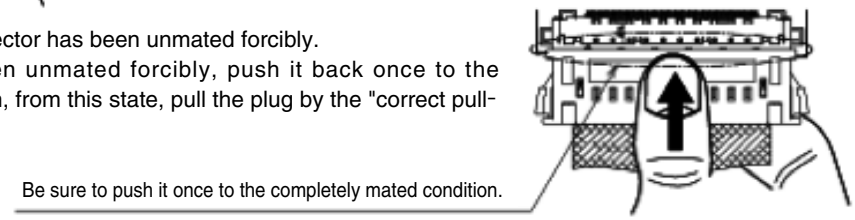

[4] In the case when you have pulled it out with one side locked
If the plug has been pulled out with one side locked, the locked part could be damaged if you pull it out forcibly.
In such a situation, do not try to unlock it forcibly, but mate the plug again as it is, and pull out the plug by the "correct pull-out method" again with both sides locked.

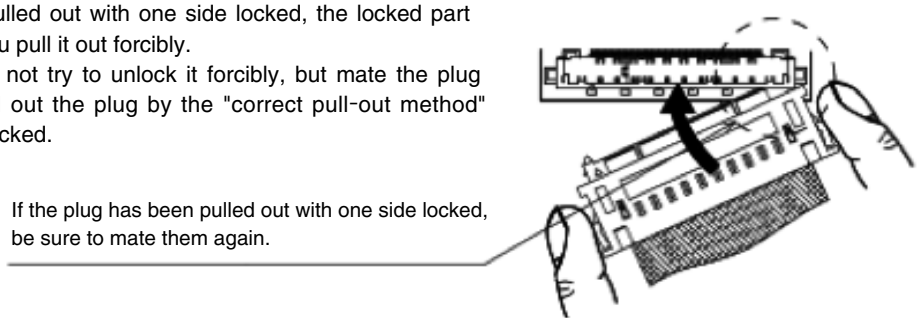

[5] Handling after mating
After mating, be careful not to apply load to the connector during cable routing.
The connector could be damaged if you pull the cable with a force of 20 N or more. Additionally, it could cause cable disconnection.
Please make sure that you do not pull the cable forcibly.

Repeated strain could also cause cable disconnection.
Avoid any use which involves repeated strain.

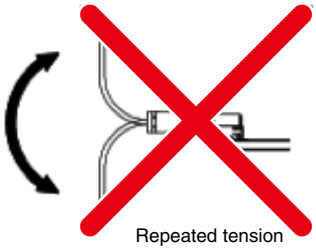

When you use a cable that is folded back from the connector base, please maintain a large bend radius or keep the folding position away from the connector base in order minimize the load on the connector.

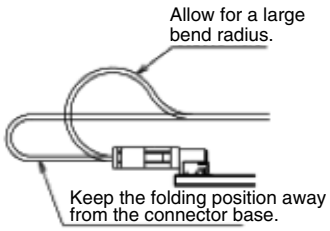

Using the cable in a folded state.

May.1.2024 Copyright 2024 HIROSE ELECTRIC CO., LTD. All Rights Reserved.

MEMO：

May.1.2024 Copyright 2024 HIROSE ELECTRIC CO., LTD. All Rights Reserved.

May.1.2024 Copyright 2024 HIROSE ELECTRIC CO., LTD. All Rights Reserved.

USA:
HIROSE ELECTRIC (U.S.A.), INC. HEADQUARTERS CHICAGO OFFICE
2300 Warrenville Road, Suite 150,
Downers Grove, IL 60515
Phone : +1-630-282-6700
http://www.hirose.com/us/

USA:
HIROSE ELECTRIC (U.S.A.), INC. SAN JOSE OFFICE
2841 Junction Ave, Suite 200
San Jose, CA. 95134
Phone : +1-408-253-9640
Fax : +1-408-253-9641
http://www.hirose.com/us/

USA:
HIROSE ELECTRIC (U.S.A.), INC. DETROIT OFFICE (AUTOMOTIVE)
17197 N. Laurel Park Drive, Suite 253,
Livonia, MI 48152
Phone : +1-734-542-9963
Fax : +1-734-542-9964
http://www.hirose.com/us/

USA:
HIROSE ELECTRIC (U.S.A.), INC. BOSTON OFFICE
300 Brickstone Square Suite 201,
Andover, MA 01810
Phone : +1-978-662-5255

THE NETHERLANDS:
HIROSE ELECTRIC EUROPE B.V.
Hogehillweg #8 1101 CC Amsterdam Z-O
Phone : +31-20-6557460
Fax : +31-20-6557469
http://www.hirose.com/eu/

GERMANY:
HIROSE ELECTRIC EUROPE B.V. GERMAN BRANCH
Schoenbergstr. 20, 73760 ostfildern
Phone : +49-711-456002-1
Fax : +49-711-456002-299
http://www.hirose.com/eu/

GERMANY:
HIROSE ELECTRIC EUROPE B.V. NUREMBERG OFFICE
Neumeyerstrasse 22-26, 90411 Nurnberg
Phone : +49-911 32 68 89 63
Fax : +49-911 32 68 89 69
http://www.hirose.com/eu/

GERMANY:
HIROSE ELECTRIC EUROPE B.V. HANOVER OFFICE
Bayernstr. 3, Haus C 30855 Langenhagen, Germany
Phone : +49-511 97 82 61 30
Fax : +49-511 97 82 61 35
http://www.hirose.com/eu/

FRANCE:
HIROSE ELECTRIC EUROPE B.V. PARIS OFFICE
130 Avenue Joseph Kessel, Bat E, 78960
Voisins le Bretonneux, France
Phone : +33-1-85764886
Fax : +33-1-85764823
http://www.hirose.com/eu/

UNITED KINGDOM:
HIROSE ELECTRIC EUROPE BV (UK BRANCH)
4 Newton Court, Kelvin Drive, Knowlhill,
Milton Keynes, MK5 8NH
Phone : +44-1908 202050
Fax : +44-1908 202058
http://www.hirose.com/eu/

CHINA:
HIROSE ELECTRIC (SHANGHAI) CO., LTD.
18, Enterprise Center Tower 2, 209# Gong He Road, Jing'an District, Shanghai, CHINA 200070
Phone : +86-21-6391-3355
Fax : +86-21-6391-3335
http://www.hirose.com/cn/

CHINA:
HIROSE ELECTRIC (SHANGHAI) CO.,LTD. BEIJING BRANCH
A1001, Ocean International Center, Building 56# East 4th Ring Middle Road, ChaoYang District, Beijing, 100025
Phone : +86-10-5165-9332
Fax : +86-10-5908-1381
http://www.hirose.com/cn/

CHINA:
HIROSE ELECTRIC TECHNOLOGIES (SHENZHEN) CO., LTD.
Room 09-13, 19/F, Office Tower Shun Hing Square, Di Wang Commercial Centre, 5002 Shen Nan Dong Road, Shenzhen City, Guangdong Province, 518008
Phone : +86-755-8207-0851
Fax : +86-755-8207-0873
http://www.hirose.com/cn/

HONG KONG:
HIROSE ELECTRIC HONGKONG TRADING CO., LTD.
Room 1001, West Wing, Tsim Sha Tsui Centre, 66 Mody Road, Tsim Sha Tsui East, Kowloon, Hong Kong
Phone : +852-2803-5338
Fax : +852-2591-6560
http://www.hirose.com/hk/

TAIWAN:
HIROSE ELECTRIC TAIWAN CO., LTD.
103 8F, No.87, Zhengzhou Rd., Taipei
Phone : +886-2-2555-7377
Fax : +886-2-2555-7355
http://www.hirose.com/tw/

KOREA:
HIROSE KOREA CO.,LTD.
143, Gongdan 1-daero, Siheung-si,
Gyeonggi-do, 15084, Korea
Phone : +82-31-496-7000
Fax : +82-31-496-7100
http://www.hirose.co.kr/

SINGAPORE:
HIROSE ELECTRIC SINGAPORE PTE. LTD.
03, Anson Road, #20-01, Springleaf Tower, Singapore 079909
Phone : +65-6324-6113
Fax : +65-6324-6123
http://www.hirose.com/sg/

INDIA:
HIROSE ELECTRIC SINGAPORE PTE. LTD. DELHI LIAISON OFFICE
Office NO.552, Regus-Green Boulevard, Level5, Tower C, Sec62, Plot B-9A, Block B, Noida, 201301, Uttar Pradesh, India
Phone : +91-12-660-8018
Fax : +91-120-4804949
http://www.hirose.com/sg/

INDIA:
HIROSE ELECTRIC SINGAPORE PTE. LTD. BANGALORE LIAISON OFFICE
Unit No-403, 4th Floor, No-84, Barton Centre, Mahatma Gandhi (MG) Road, Bangalore 560 001, Karnataka, India
Phone : +91-80-4120 1907
Fax : +91-80-4120 9908
http://www.hirose.com/sg/

MALAYSIA:
PENANG REPRESENTATIVE OFFICE
73-3-1, Ideal@The One, Jalan Mahsuri, Bayan Lepas Penang, 11950, Malaysia
Phone : +604-648-5536
http://www.hirose.com/sg/

THAILAND:
BANGKOK OFFICE (REPRESENTATIVE OFFICE)
Unit 4703, 47th FL., 1 Empire Tower, South Sathorn Road, Yannawa, Sathorn, Bangkok 10120 Thailand
Phone : +66-2-686-1255
Fax : +66-2-686-3433
http://www.hirose.com/sg/

Creative Links to World Electronics ®

HRS

HIROSE ELECTRIC CO.,LTD.
2-6-3,Nakagawa Chuoh,Tsuzuki-Ku,Yokohama-Shi 224-8540,JAPAN
TEL: +81-45-620-3526 Fax: +81-45-591-3726
http://www.hirose.com
http://www.hirose-connectors.com

HRS The characteristics and the specifications contained herein are for reference purpose. Please refer to the latest customer drawings prior to use.
The contents of this catalog are current as of date of 02/2018. Contents are subject to change without notice for the purpose of improvements.