May.1.2024 Copyright 2024 HIROSE ELECTRIC CO., LTD. All Rights Reserved.
In case of consideration for using Automotive equipment / device which demand high reliability, kindly contact our sales window correspondents.

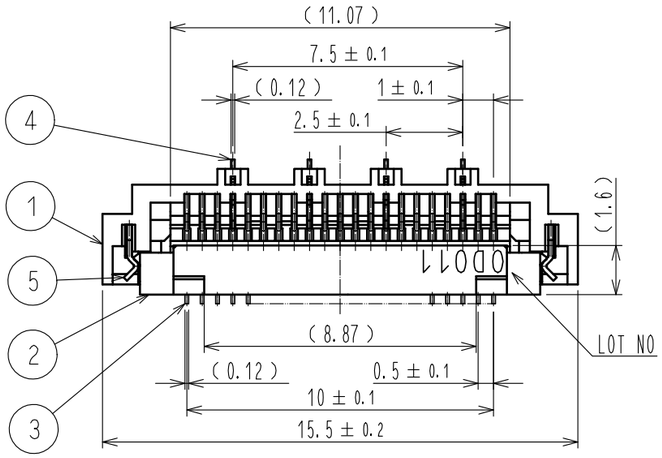

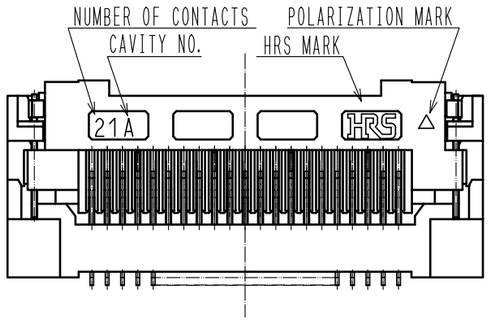

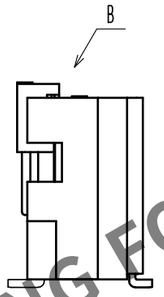

B(10:1)

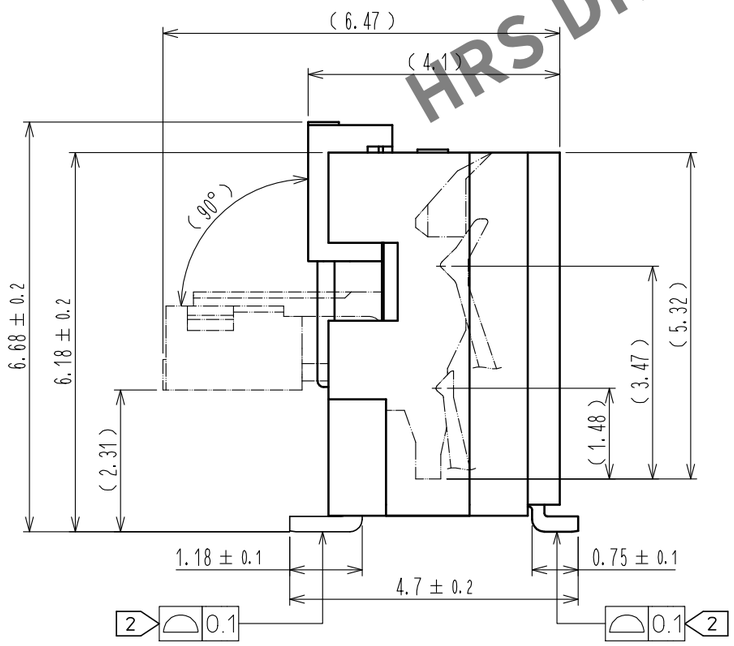

RECOMMENDED LAND PATTERN, METAL MASK (FREE)

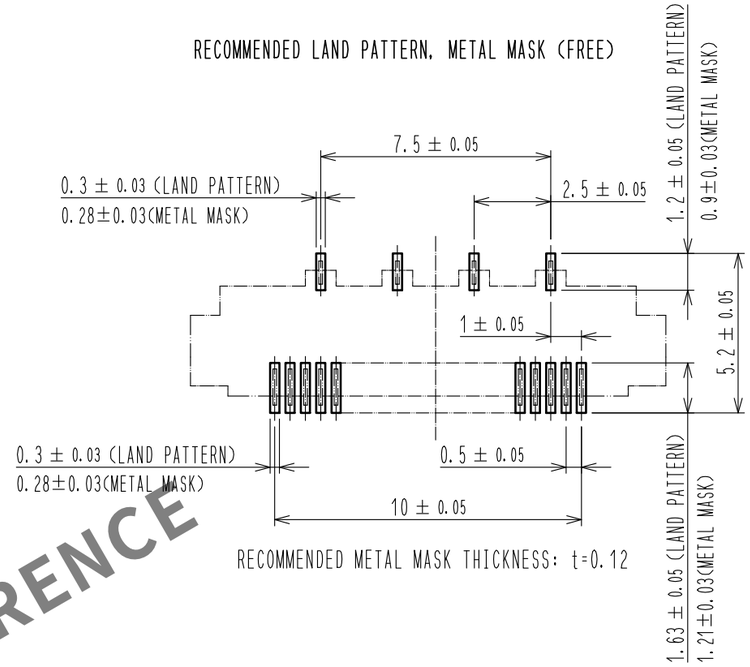

RECOMMENDED METAL MASK THICKNESS: t=0.12

NOTES
1 THE DIMENSIONS IN PARENTHESES ARE REFERENCE.
2 LEAD CO-PLANARITY SHALL BE 0.1 MAX.
3 TO BE DELIVERED WITH TAPE AND REEL PACKAGES.
4 THIS PRODUCT SATISFIES HALOGEN FREE REQUIREMENTS DEFINED AS 900 ppm MAXIMUM CHLORINE, 900 ppm MAXIMUM BROMINE, AND 1,500 ppm MAXIMUM TOTAL OF CHLORINE AND BROMINE

HRS DRAWING FOR REFERENCE

NO.	MATERIAL	FINISH , REMARKS
4	PHOSPHOR BRONZE	TIN PLATING(REFLOW FINISHED) 1 μm MIN AND COPPER(INTERLAYER) 0.15 μm MIN OVER NICKEL 1 μm MIN
3	PHOSPHOR BRONZE	CONTACT AREA, LEAD: GOLD PLATING 0.03 μm MIN OVER NICKEL 1 μm MIN OTHER: NICKEL 1 μm MIN
2	LCP	BLACK, UL94V-0
1	LCP	GRAY, UL94V-0

NO.	MATERIAL	FINISH , REMARKS
9	(CONNECTOR)	
8	POLYSTYRENE	
7	POLYESTER	
6	POLYSTYRENE	
5	PHOSPHOR BRONZE (PLATED MATERIAL)	NICKEL PLATING 0.2μm MIN

UNITS	SCALE	COUNT	DESCRIPTION OF REVISIONS	DESIGNED	CHECKED	DATE
mm	5 : 1	8	DIS-F-00017589	TA. SUZUKI	HS. HIRAHARA	20230322

HIROSE ELECTRIC CO., LTD.

APPROVED	: MO. ISHIDA	20101105	DRAWING NO.	EDC3-334620-00
CHECKED	: YN. TAKASHITA	20101105	PART NO.	FH48-21S-0.5SV
DESIGNED	: SJ. OKAMURA	20101105	CODE NO.	CL0580-3103-9-00
DRAWN	: SJ. OKAMURA	20101105		2 1/5

FORM HC0011-5-7

May.1.2024 Copyright 2024 HIROSE ELECTRIC CO., LTD. All Rights Reserved.
In case of consideration for using Automotive equipment / device which demand high reliability, kindly contact our sales window correspondents.

RECOMMENDED FFC (FREE)

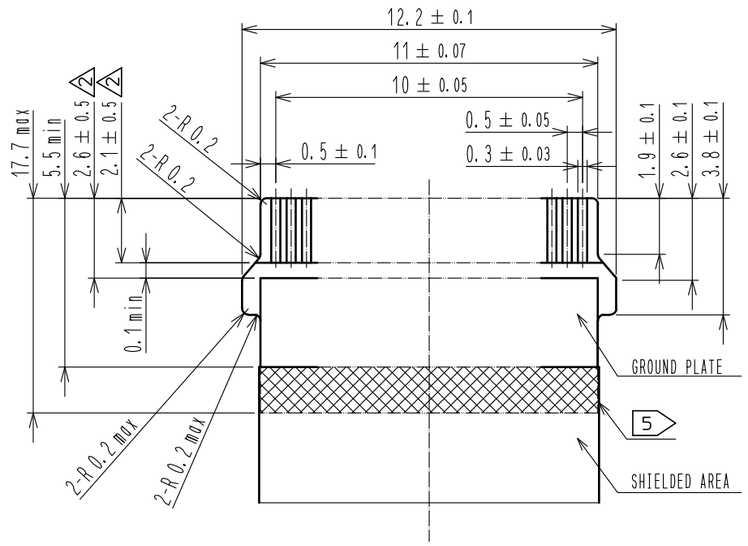

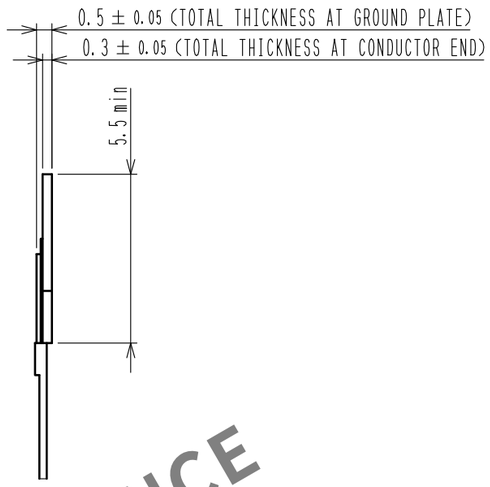

FFC CONSTRUCTION (RECOMMENDED SPECIFICATIONS)

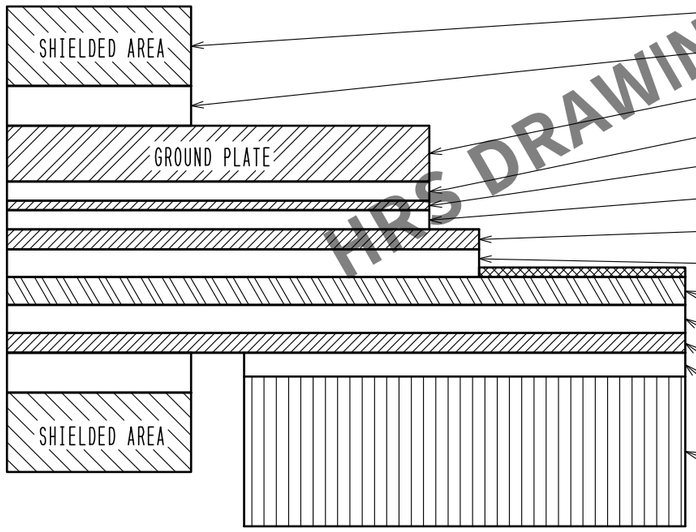

MATERIAL NAME	MATERIAL	TOTAL THICKNESS AT GROUND PLATE (μm)	TOTAL THICKNESS AT CONDUCTOR END (μm)
SHIELDING MATERIAL			
CONDUCTIVE ADHESIVE	POLYESTER TYPE		
COPPER FILM (TIN PLATED)		70	
ADHESIVE	ACRYLIC TYPE	24	
BASE MATERIAL	POLYESTER TYPE	12	
ADHESIVE	ACRYLIC TYPE	24	
INSULATED LAYER	POLYESTER TYPE	25	
ADHESIVE	POLYESTER TYPE	35	
SOFT COPPER FILM (NICKEL UNDER PLATED / GOLD PLATED)		35	35
ADHESIVE	POLYESTER TYPE	35	35
INSULATED LAYER	POLYESTER TYPE	25	25
ADHESIVE	POLYESTER TYPE	30	30
STIFFENER	POLYESTER TYPE	188	188
	TOTAL	503	313

NOTES 5 PLEASE OVERLAP SHIELD AREA ON GROUND PLATE.
6 PLEASE INQUIRE OF HIROSE WHEN YOU WANT TO CHANGE THE SPECIFICATION AND THE THICKNESS COMPOSITION IN THIS PART.
2 7 RECOMMENDED PUNCHER DIRECTION: FROM CONDUCTOR SIDE TO STIFFENER SIDE.

HRS DRAWING FOR REFERENCE

HRS

DRAWING NO.	EDC3-334620-00
PART NO.	FH48-21S-0.5SV
CODE NO.	CL0580-3103-9-00

2 2/5

May.1.2024 Copyright 2024 HIROSE ELECTRIC CO., LTD. All Rights Reserved.
In case of consideration for using Automotive equipment / device which demand high reliability, kindly contact our sales window correspondents.

EMBOSSED CARRIER TAPE DIMENSION (2:1)

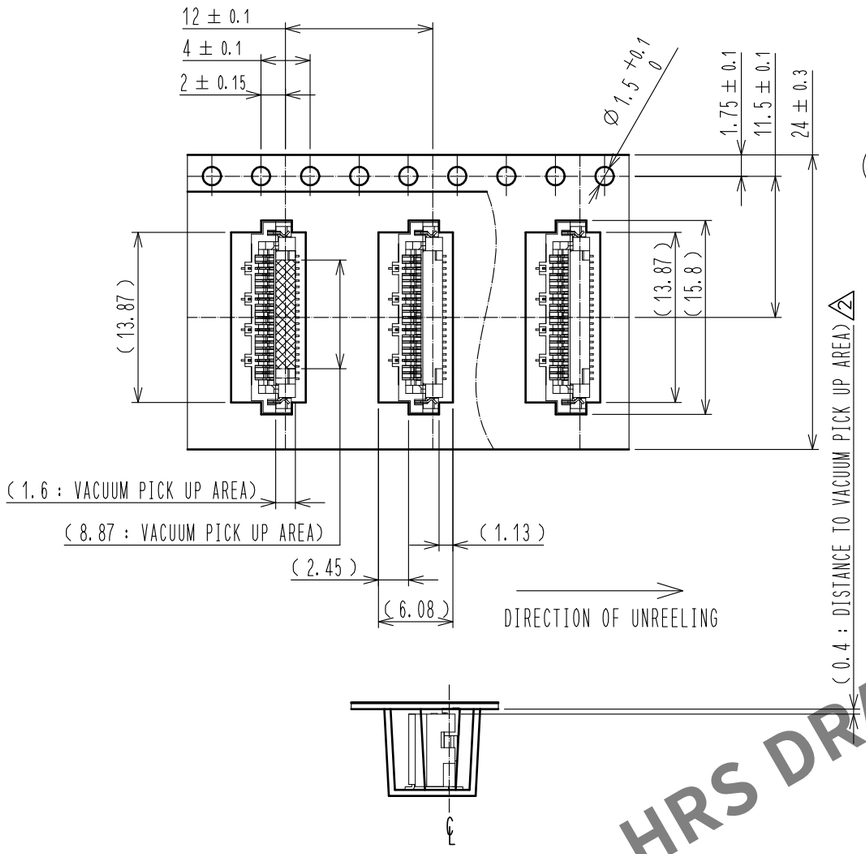

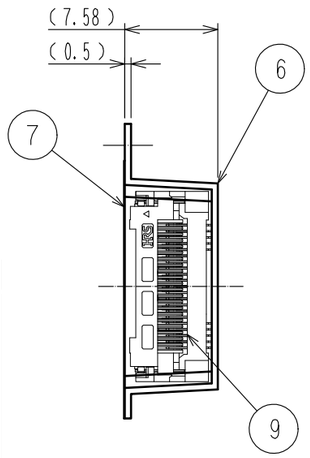

REEL DIMENSION (FREE)

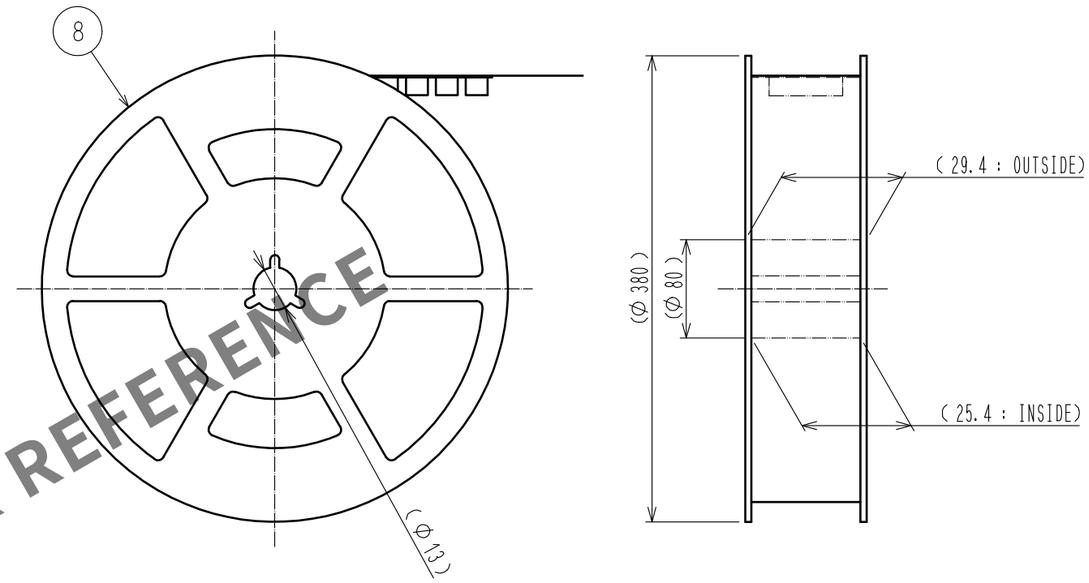

HRS DRAWING FOR REFERENCE

NOTES 8 PER REEL: 1,000 CONNECTORS.
2 9 REFER TO JIS C 0806 AND IEC 60286-3(PACKING OF COMPONENTS FOR AUTOMATIC HANDLING.)

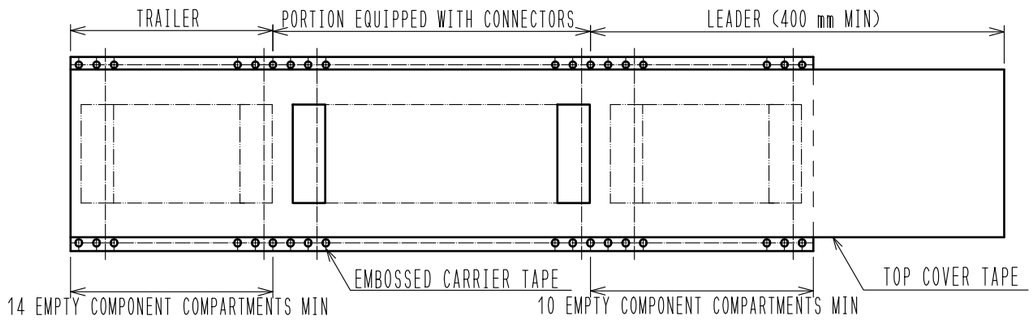

HRS	DRAWING NO.	EDC3-334620-00
	PART NO.	FH48-21S-0.5SV
	CODE NO.	CL0580-3103-9-00

2 3/5

FORM HC0011-5-8

May.1.2024 Copyright 2024 HIROSE ELECTRIC CO., LTD. All Rights Reserved.
In case of consideration for using Automotive equipment / device which demand high reliability, kindly contact our sales window correspondents.

This connector requires delicate and careful handling.
Read through the instructions shown below and handle the connector properly.
Each values indicating here are for reference and may differ from standard value.

【INSTRUCTIONS FOR MOUNTING ON THE BOARD】

◆Warp of Board
Minimize warp of the board as much as possible.
Lead co-planarity is 0.1 mm or less.
Too much warp of the board may result in a soldering failure.

◆Load to Connector
Do not add 1N or greater external force when unreel or pick and place the connector etc.
or it may get broken.
In addition, do not insert the FFC or operate the connector before mounting it.

◆Reflow temperature profile △2
Apply reflow temperature profile within the specified conditions.
For specific applications, the recommended temperature may vary depending on
type/volume/thickness of solder paste and size/thickness of PCB.
Please consult with your solder paste and equipment manufacturer for specific recommendations.
The temperatures mentioned below refer to the PCB surface temperature near the connector contact leads.
- Reflow method : IR reflow
- Number of reflow cycles : 2 cycles MAX.

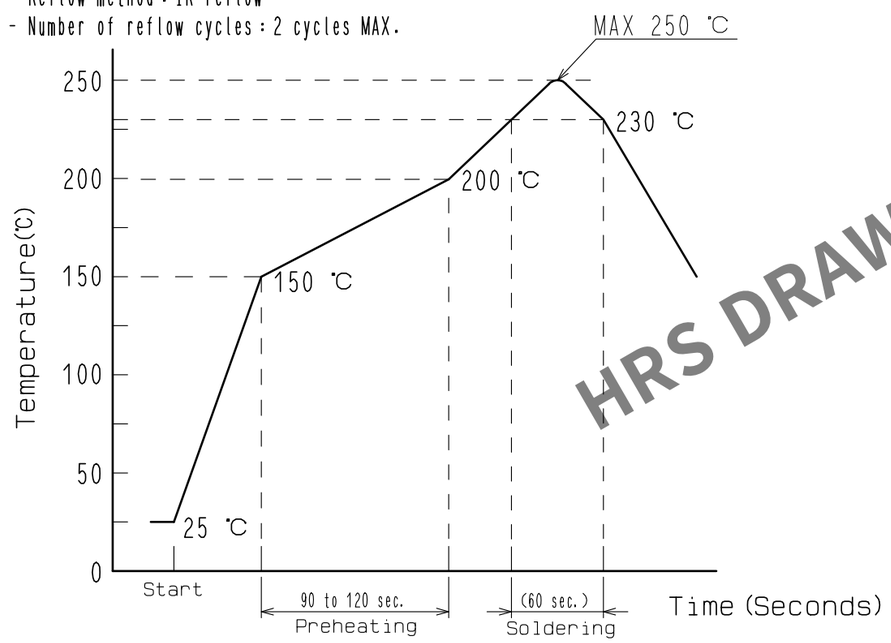

【INSTRUCTIONS FOR PCB HANDLING AFTER MOUNTING THE CONNECTOR】

◆Loard to Board
- Splitting a large board into several pieces
- Screwing the board

Avoid the handling described above so that no force is exerted on the board during the assembly process.
Otherwise, the connector may become defective.

◆Amount of Warp
The warp of a 100 mm wide board should be 1 mm or less.
The warp of board suffers stress on connector and the connector may become defective.

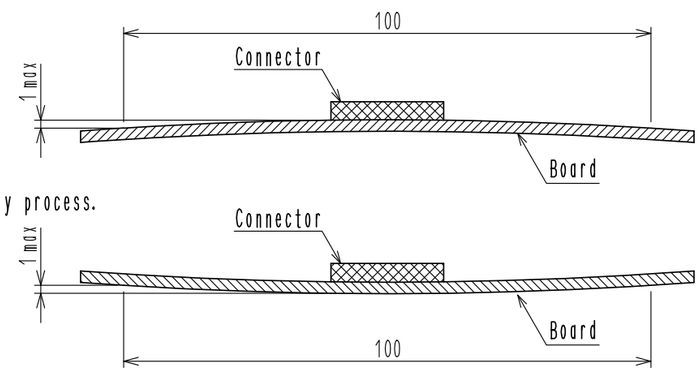

【INSTRUCTIONS ON INSERTING FFC AND CONNECTION】

◆Actuator position
Actuator position as delivered is ready for FFC insertion.
FFC locked position is that the FFC is inserted and the actuator is rotated by 90° .
Do not rotate the actuator before FFC is inserted.

◆Direction of contacts
Insert the FFC in a way that the FFC circuit exposed side faces to the housing,
and FFC stiffener side to the actuator.

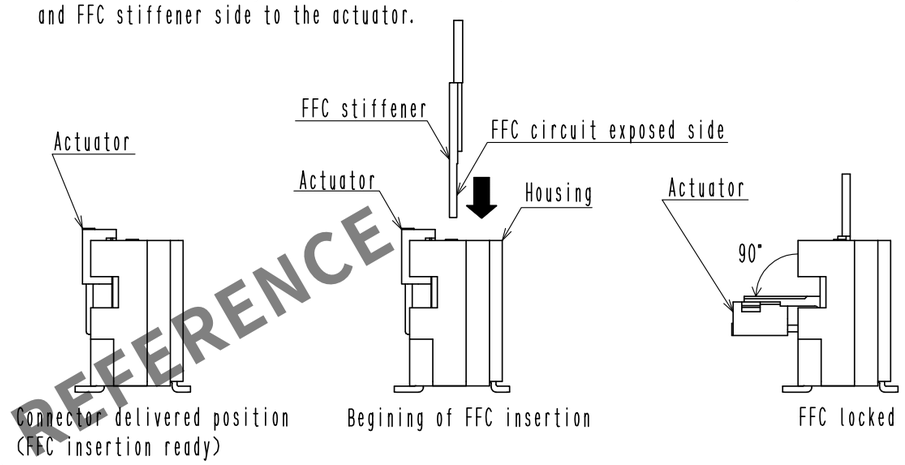

◆Insrting the FFC
Insert the FFC at a right angle to the connector and properly to the very end.

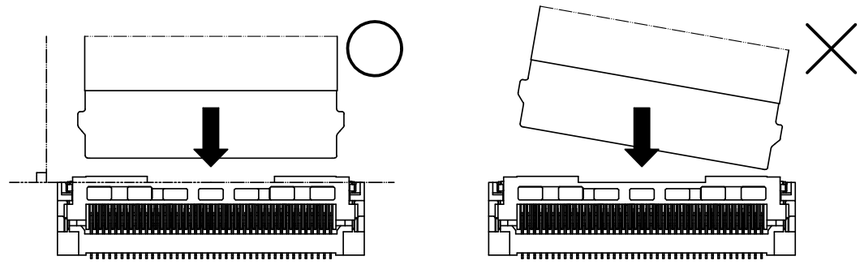

HRS DRAWING FOR REFERENCE

<INSTRUCTION MANUAL (1)>

HRS	DRAWING NO.	EDC3-334620-00
	PART NO.	FH48-21S-0.5SV
	CODE NO.	CL0580-3103-9-00 △2 4/5

May.1.2024 Copyright 2024 HIROSE ELECTRIC CO., LTD. All Rights Reserved.
In case of consideration for using Automotive equipment / device which demand high reliability, kindly contact our sales window correspondents.

◆Use of the actuator

1. The actuator rotates around the rotational axis as shown below. Rotate the actuator.
2. The actuator will not open moure than 90° . Do not apply any force backward beyond this point. It may cause contact deformation and actuator breakage.
3. Do not pinch or pick the actuator to lift it as shown below. Otherwise, it may break. (Do not carry out any operation other than rotating the actuator as shown above.)

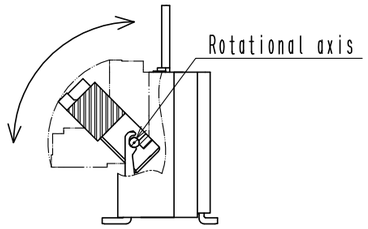

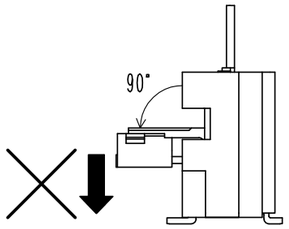

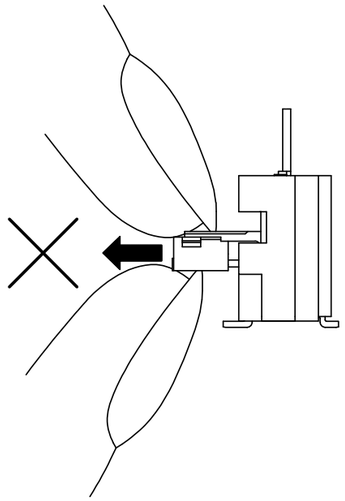

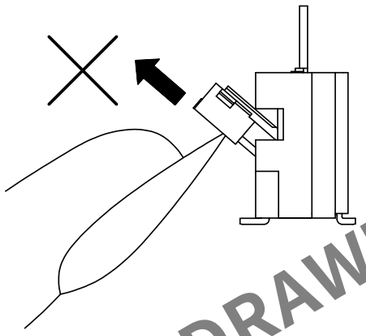

◆Checking the Locking Condition

1. In the locked condition, make sure that the actuator is horizontal on the board surface.
2. After FFC is locked, make sure the position of TAB and guides.

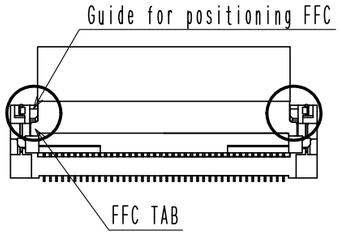

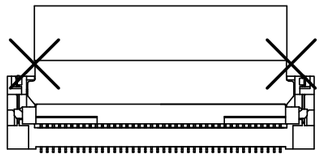

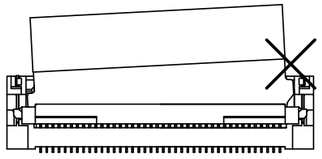

【INSTRUCTION ON FFC LAYOUT CONNECTION】

◆Load to FFC

Be very careful not to apply force to the connector directly after inserting FFC.
Otherwise, the connector or the FFC may break.
In particular, design the FFC layout with care not to bend it sharply in a direction of the actuator side near the insertion operating.

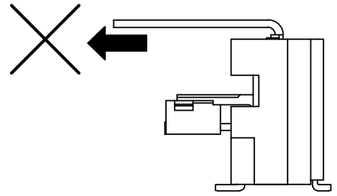

Load: 0.05×n N max (n: number of contacts)

【INSTRUCTIONS ON REMOVING FFC】

◆For FFC removal, remove the FFC after unlocking the actuator.
Remove the FFC by about 7 degrees perpendicular to PCB.

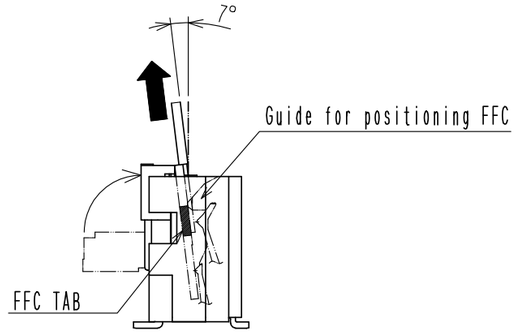

【OTHER INSTRUCTIONS】

◆Instructions on Manual Soldering

Follow the instructions shown below when soldering the connector manually during repair work, etc.

1. Do not perform reflow soldering or manual soldering with the FFC inserted into the connector.
2. Do not heat the connector excessively. Be very careful not to let the soldering iron contact any parts other than connector leads. Otherwise, the connector may be deformed or melt.
3. Do not use excessive solder (or flux).
   If excessive solder (or flux) is used on the terminals, solder or flux may adhere to the contacts or rotating parts of the actuator, resulting in poor contact or a rotation failure of the actuator.

2 ◆Please consult with our sales representative if you are using FFC with different configuration from our recommendation.

2 ◆Attachment of foreign particles with the connector contact may lead to conduction failure.
In this particular case, the conduction failure may be fixed by re-inserting the FFC.

HRS DRAWING FOR REFERENCE

<INSTRUCTION MANUAL (2)>

HRS	DRAWING NO.	EDC3-334620-00
	PART NO.	FH48-21S-0.5SV
	CODE NO.	CL0580-3103-9-00

2 5/5