May.1.2024 Copyright 2024 HIROSE ELECTRIC CO., LTD. All Rights Reserved.
In case of consideration for using Automotive equipment / device which demand high reliability, kindly contact our sales window correspondents.

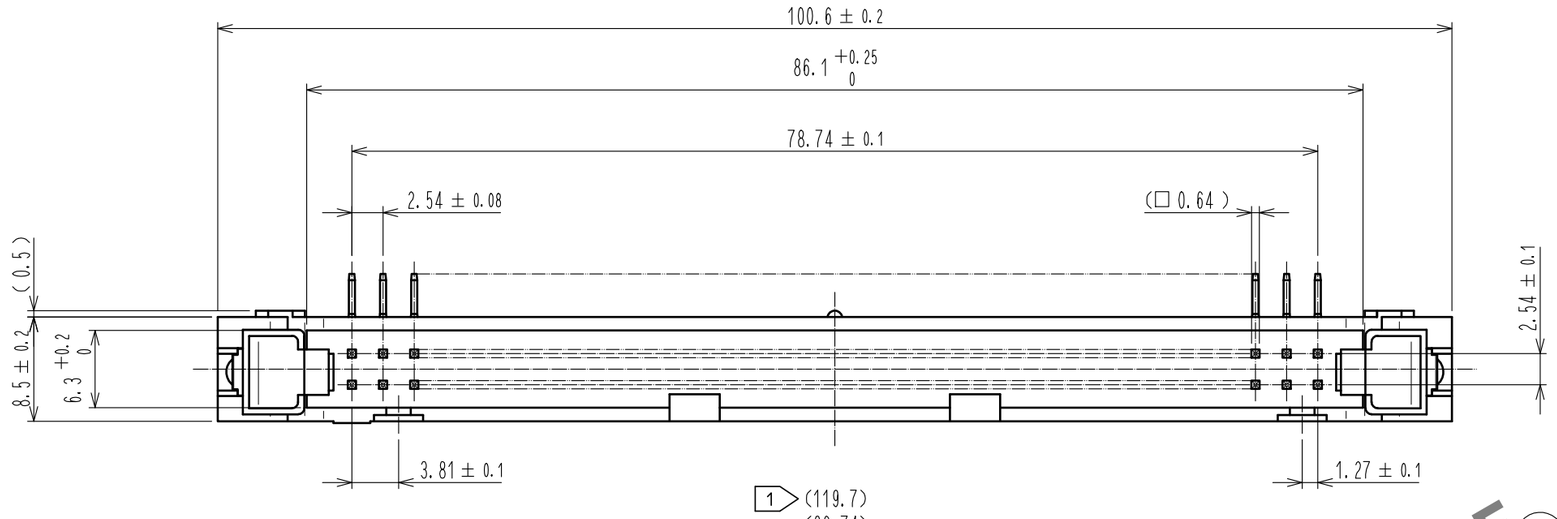

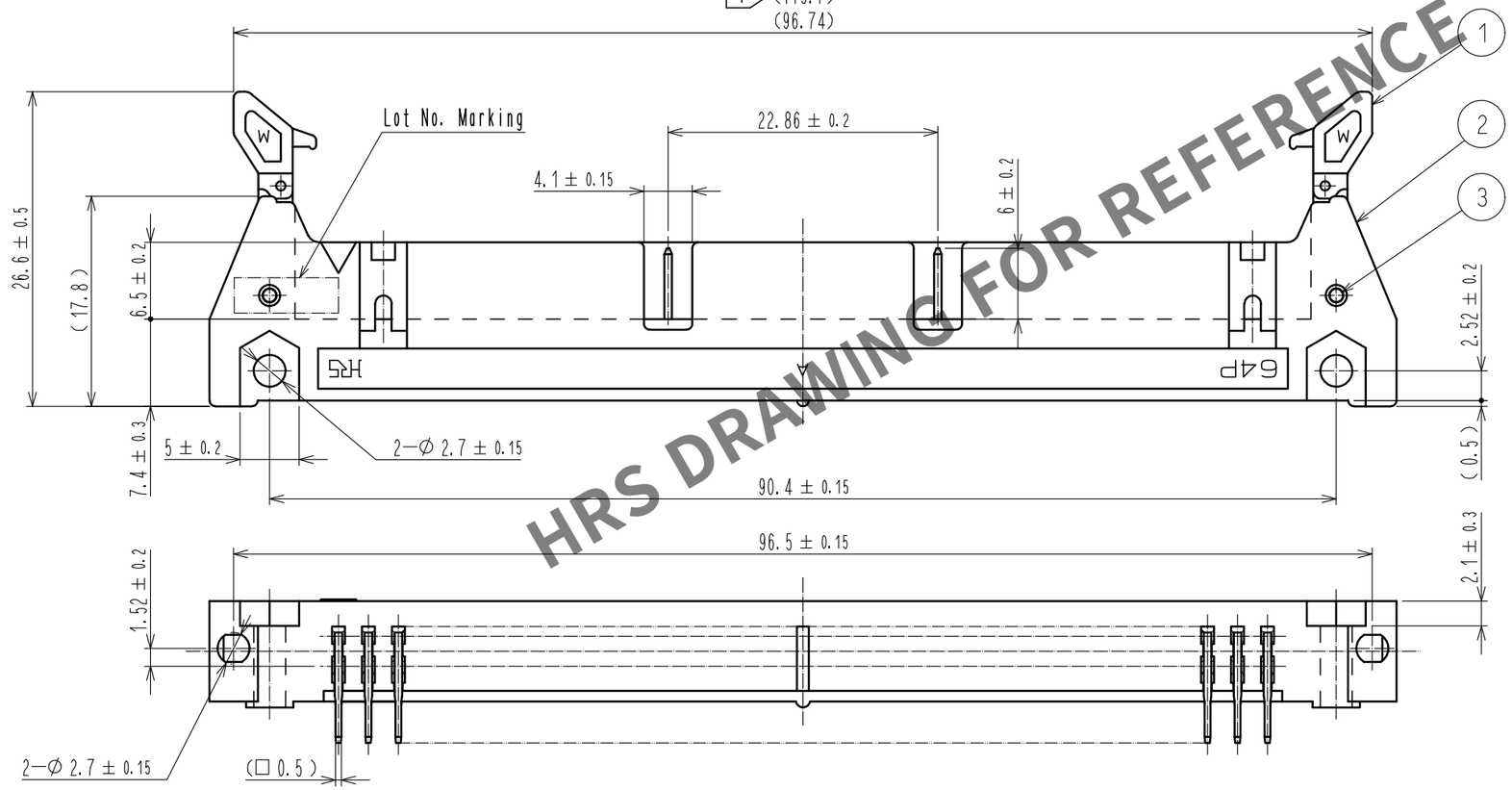

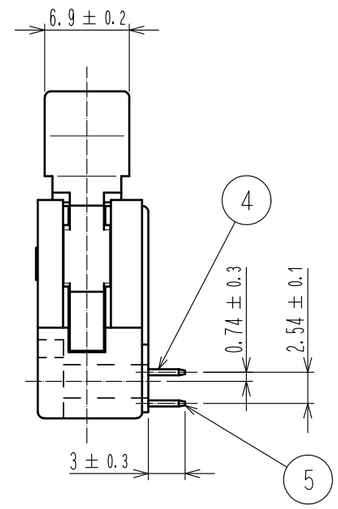

HRS DRAWING FOR REFERENCE

Notes 1 The upper row dimension shows when the lock open out.
2 The dimensions in parentheses are for reference.
△1 3 UL(File No.E52653)
C-UL(File No.E52653) authorization article.

Recommended PC board hole pattern

Mating side

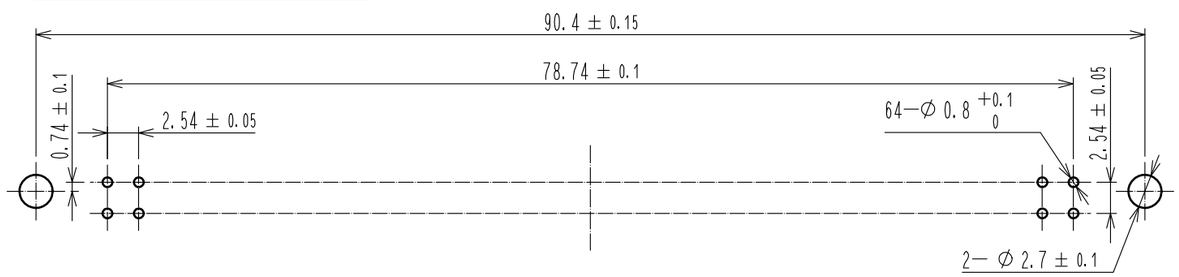

NO.	MATERIAL	FINISH , REMARKS	NO.	MATERIAL	FINISH , REMARKS
3	STAINLESS		5	BRASS	Contact area : Gold 0.15μm min. Dip area : TIN-Plating 2μm min. Under plating : Nickel 2.5μm min.
2	PBT	BLACK UL94V-0	4	BRASS	Contact area : Gold 0.15μm min. Dip area : TIN-Plating 2μm min. Under plating : Nickel 2.5μm min.
1	PBT	BLACK UL94V-0			

UNITS	SCALE	COUNT	DESCRIPTION OF REVISIONS	DESIGNED	CHECKED	DATE
mm	2 : 1	△1 1	DIS-F-00005920	AK. IWAHORI	HT. YAMAGUCHI	20200306

HRS HIROSE ELECTRIC CO., LTD.

APPROVED	: HT. YAMAGUCHI	20181210	DRAWING NO.	EDC-361203-63-00
CHECKED	: HT. YAMAGUCHI	20181210	PART NO.	HIF3MAW-64PA-2.54DS(63)
DESIGNED	: TS. OONO	20181207	CODE NO.	CL610-3513-8-63 △1 1/1
DRAWN	: MK. OOKI	20181207		

FORM HC0011-5-7