May.1.2024 Copyright 2024 HIROSE ELECTRIC CO., LTD. All Rights Reserved.
In case of consideration for using Automotive equipment / device which demand high reliability, kindly contact our sales window correspondents.

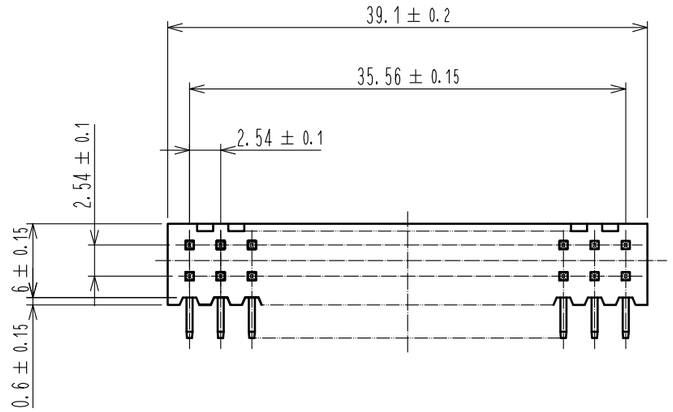

Recommended PC board hole pattern

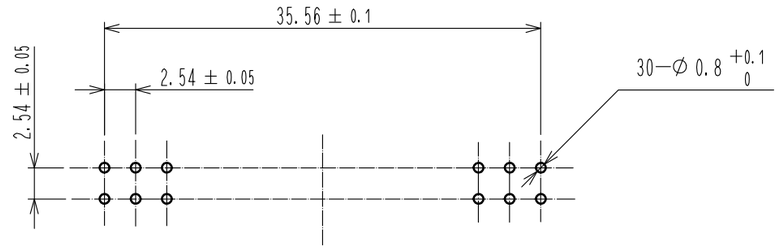

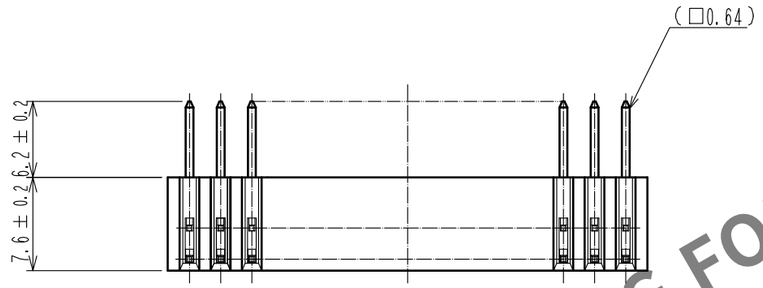

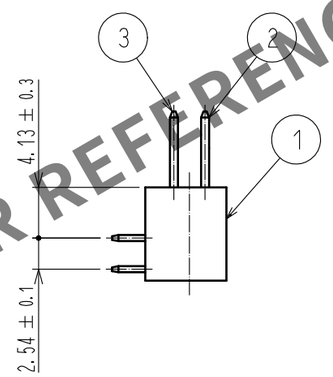

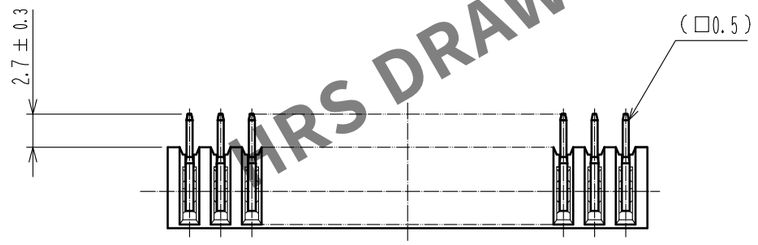

HRS DRAWING FOR REFERENCE

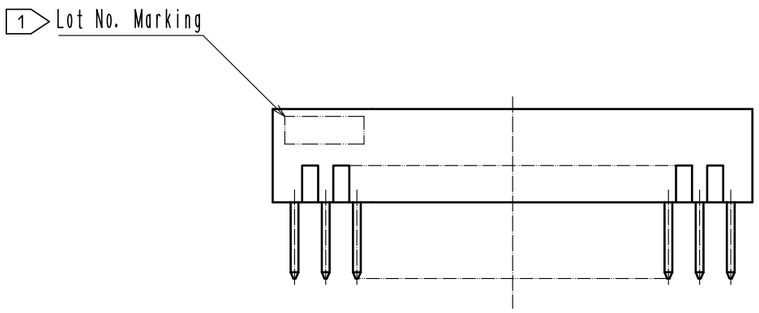

Notes 1 The position of Lot No. is optional.
2 The dimensions in parentheses are for reference.

NO.	MATERIAL	FINISH , REMARKS
1	PBT	BLACK UL94V-0

NO.	MATERIAL	FINISH , REMARKS
3	BRASS	Contact area : Gold 0.2μm min. Dip area : TIN-Plating 2μm min. Under plating : Nickel 2.5μm min.
2	BRASS	Contact area : Gold 0.2μm min. Dip area : TIN-Plating 2μm min. Under plating : Nickel 2.5μm min.

UNITS	SCALE	COUNT	DESCRIPTION OF REVISIONS	DESIGNED	CHECKED	DATE
mm	2 : 1	0				

HRS HIROSE ELECTRIC CO., LTD.

APPROVED	: HT. YAMAGUCHI	18. 06. 25	DRAWING NO.	EDC-016901-71-21
CHECKED	: HT. YAMAGUCHI	18. 06. 25	PART NO.	HIF3E-30PA-2.54DS(71)
DESIGNED	: MT. ITANO	18. 06. 25		
DRAWN	: MK. OOKI	18. 06. 21	CODE NO.	CL614-0045-0-71

0 1/1

FORM HC0011-5-7