May.1.2024 Copyright 2024 HIROSE ELECTRIC CO., LTD. All Rights Reserved.
In case of consideration for using Automotive equipment / device which demand high reliability, kindly contact our sales window correspondents.

MAIN BODY

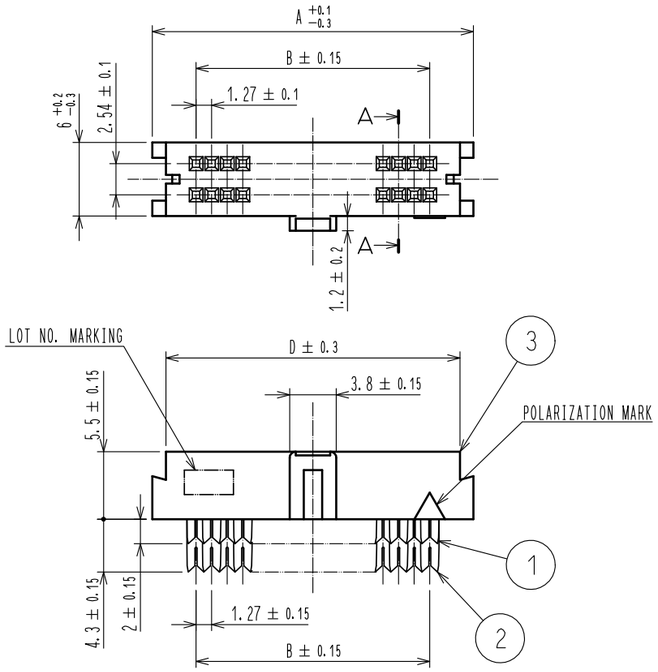

PROTECTOR A

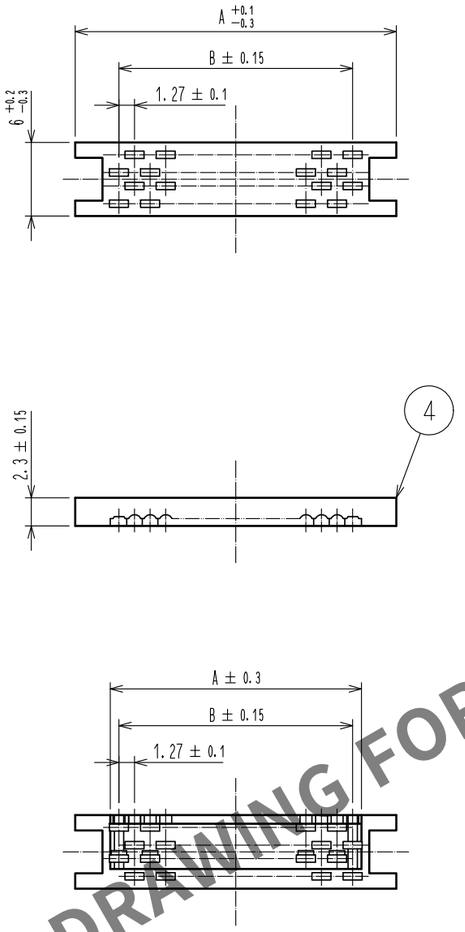

PROTECTOR B

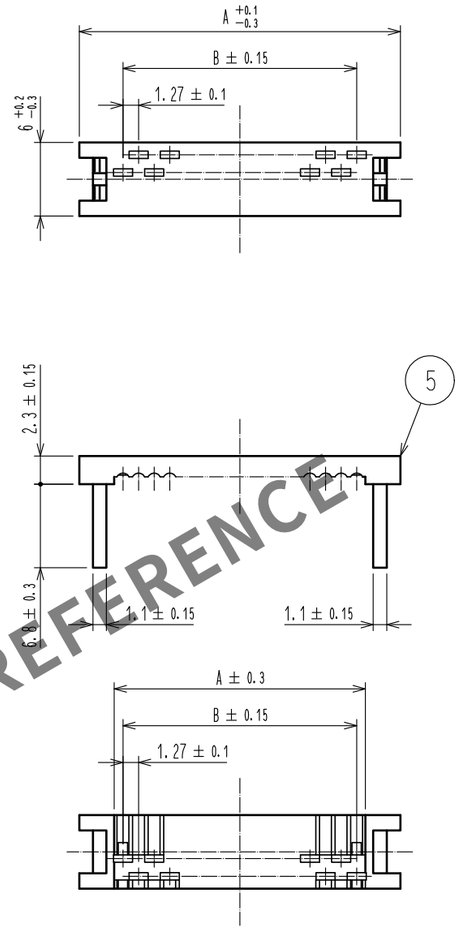

CABLE CLAMP

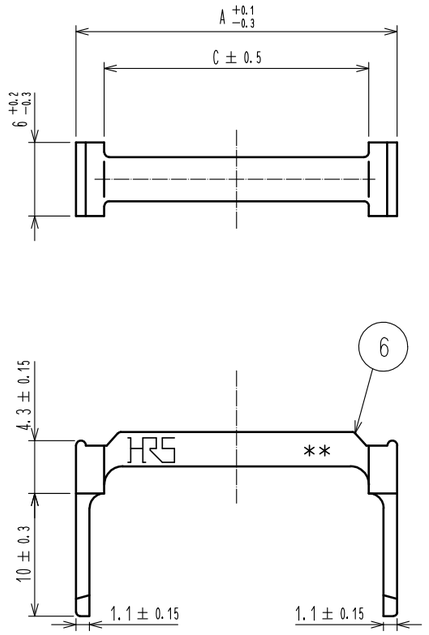

HRS DRAWING FOR REFERENCE

SECTION A-A

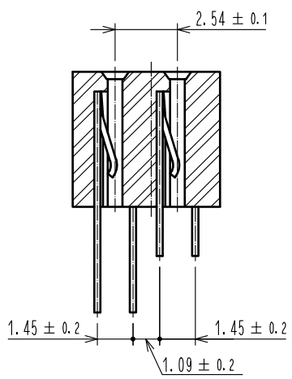

ASSEMBLY FIGURE

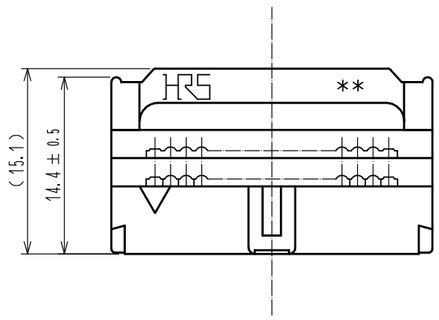

PART No.	CODE No.	PIN	A	B	C	D
HIF6-20D-1.27R(20)	CL0630-0001-4-20	20	18.55	11.43	13.95	16.35
HIF6-26D-1.27R(20)	CL0630-0002-7-20	26	22.36	15.24	17.76	20.16
HIF6-32D-1.27R(20)	CL0630-0003-0-20	32	26.17	19.05	21.57	23.97
HIF6-34D-1.27R(20)	CL0630-0004-2-20	34	27.44	20.32	22.84	25.24
HIF6-40D-1.27R(20)	CL0630-0005-5-20	40	31.25	24.13	26.65	29.05
HIF6-50D-1.27R(20)	CL0630-0006-8-20	50	37.60	30.48	33.00	35.40
HIF6-52D-1.27R(20)	CL0630-0007-0-20	52	38.87	31.75	34.27	36.67
HIF6-60D-1.27R(20)	CL0630-0008-3-20	60	43.95	36.83	39.35	41.75
HIF6-68D-1.27R(20)	CL0630-0009-6-20	68	49.03	41.91	44.43	46.83
HIF6-80D-1.27R(20)	CL0630-0010-5-20	80	56.65	49.53	52.05	54.45
HIF6-100D-1.27R(20)	CL0630-0011-8-20	100	69.35	62.23	64.75	67.15

NO.	MATERIAL	FINISH , REMARKS	NO.	MATERIAL	FINISH , REMARKS
1, 2	COPPER ALLOY	CONTACT AREA : GOLD 0.2μm min. OTHER AREA : GOLD 0.03μm min. UNDER PLATED : NICKEL 2.5μm min.	3~6	PBT	BLACK , UL94V-0

NOTE 1 THE DIMENSION IN PARENTHESE ARE FOR REFERENCE.

UNITS	SCALE	COUNT	DESCRIPTION OF REVISIONS	DESIGNED	CHECKED	DATE
mm	2 : 1	0				

HIROSE ELECTRIC CO., LTD.

APPROVED	: HS. OKAWA	15. 08. 21
CHECED	: HT. YAMAGUCHI	15. 08. 21
DESIGNED	: TH. SANO	15. 08. 21
DRAWN	: HR. NAGAYASU	15. 08. 21

DRAWING NO. EDC-365749-00-00
PART NO. HIF6-**D-1.27R(20)
CODE NO. CL630
0 1/1

FORM HC0011-5-7