Apr.1.2024 Copyright 2024 HIROSE ELECTRIC CO., LTD. All Rights Reserved.
In case of consideration for using Automotive equipment / device which demand high reliability, kindly contact our sales window correspondents.

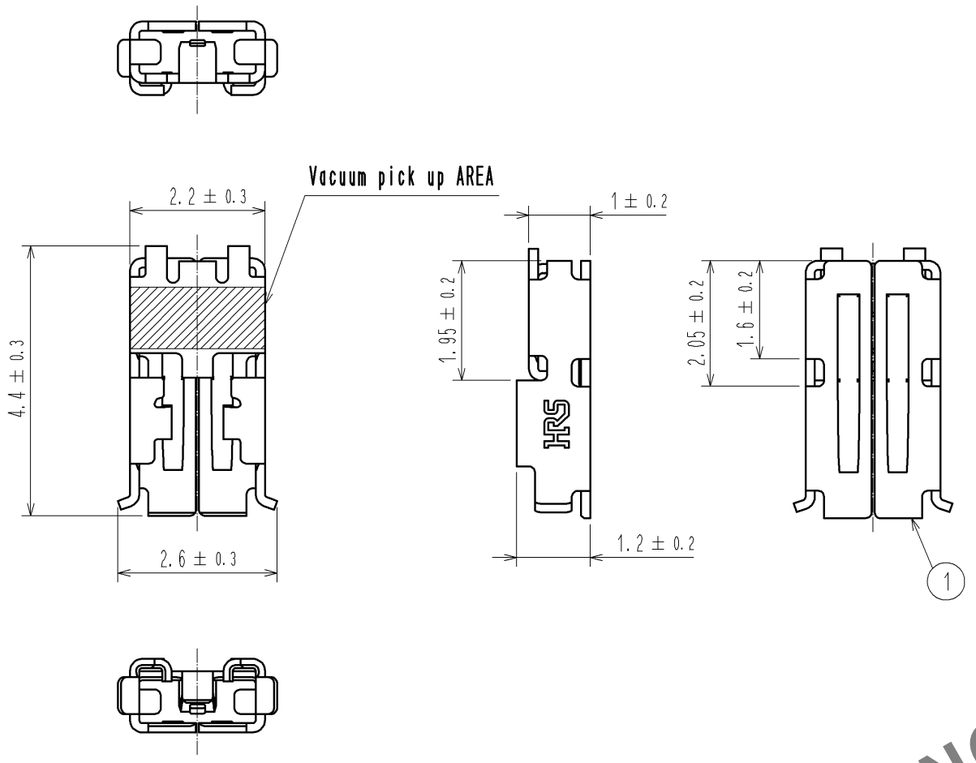

Recommended PCB Layout (5 : 1)

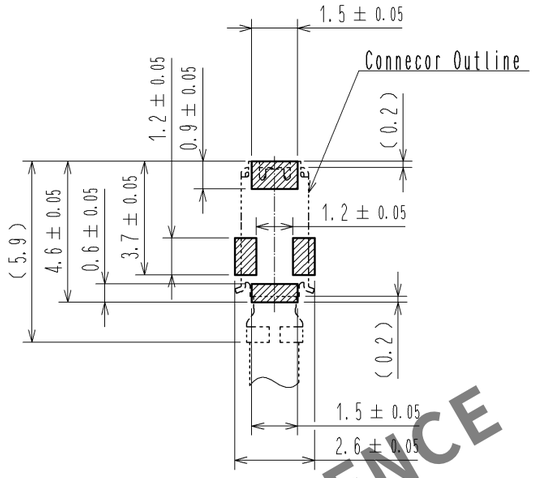

Parallel Arrangement Recommended PCB Layout(5 : 1)

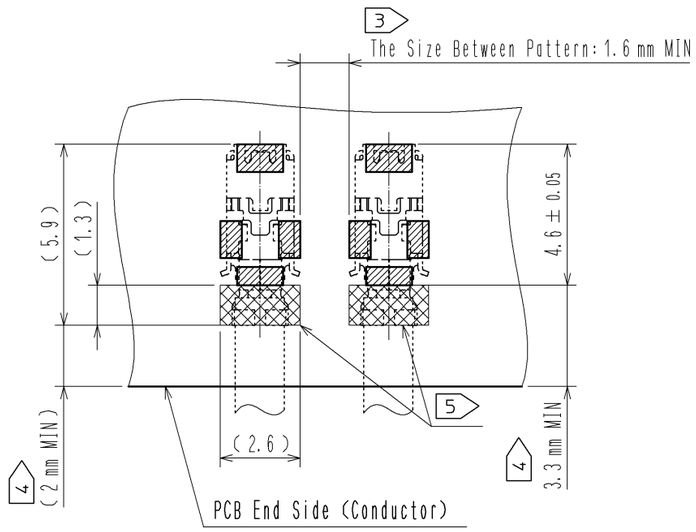

Recommended Metal Mask (5 : 1)
Tickness : 0.1mm

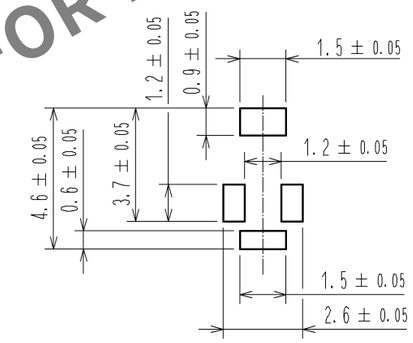

⚠Warning

This product does not have an insulator.
Please do not operate the connector during current-carrying.

Mating Figure(5:1)

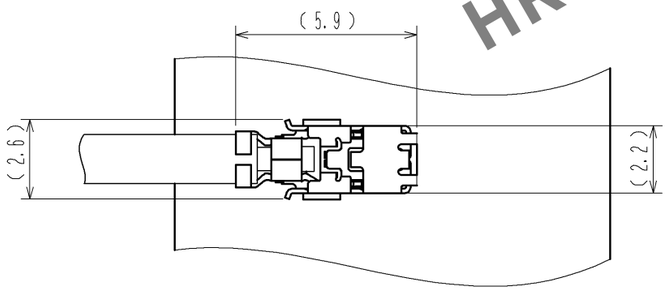

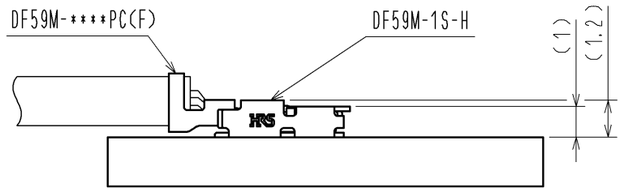

NOTE 1. lead co-planarity shall be 0.1mm MAX.
2. The Dimensions In Parenteses Are For Reference.
3 In accordance with IEC60664 and JIS C 60664, creepage distance of 1.6mm or more is required in 300V of rated voltage. (In pollution degree2 of printed wiring material)
4 Please take +0.4mm longer than the standard of recommended creepage distance for the direction, because the direction is needed consideration of the mating clearance and manufacturing tolerance of crimping.
5 Keep the indicated area away from Conductive trace. When patterning is not avoidable, Conductive trace must be covered by resist film.

NO.	MATERIAL	FINISH , REMARKS
1	Cooper Aroy	SURFACE:TIN-PLATING 1μm MIN. UNDER PLATING:NICKEL 0.5μm MIN.
2	PS	CLEAR(EMBOSSED CARIER TAPE)
3	Polyester	CLEAR(COVER TAPE)
4	PS	REEL, BLACK

UNITS	SCALE	COUNT	DESCRIPTION OF REVISIONS	DESIGNED	CHECKED	DATE
mm	10 : 1					

HIROSE ELECTRIC CO., LTD.

APPROVED	: HK. UMEHARA	14. 05. 20	DRAWING NO.	EDC3-356514-01
CHECED	: HK. UMEHARA	14. 05. 20	PART NO.	DF59M-1S-H(21)
DESIGNED	: SZ. ONO	14. 05. 20	CODE NO.	CL667-0041-5-21
DRAWN	: SZ. ONO	14. 05. 20		1/2

HRS DRAWING FOR REFERENCE

Apr.1.2024 Copyright 2024 HIROSE ELECTRIC CO., LTD. All Rights Reserved.
In case of consideration for using Automotive equipment / device which demand high reliability, kindly contact our sales window correspondents.

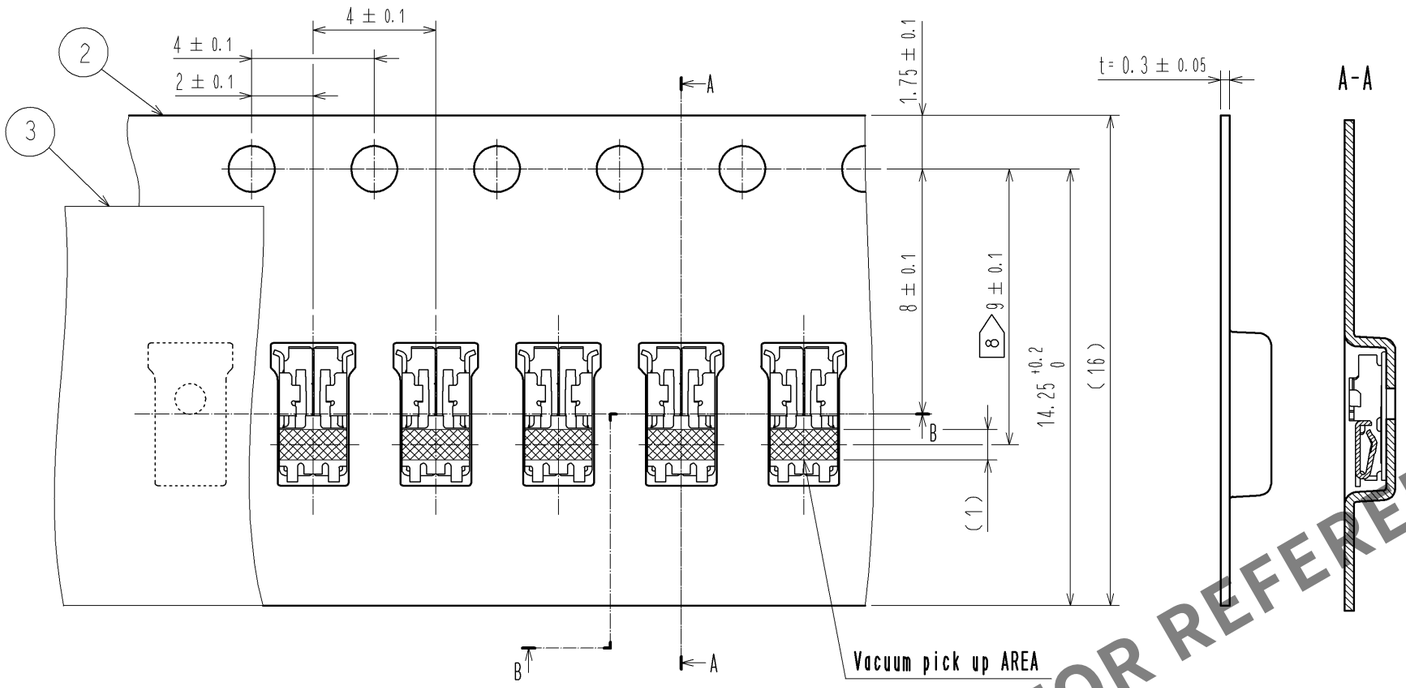

A-A

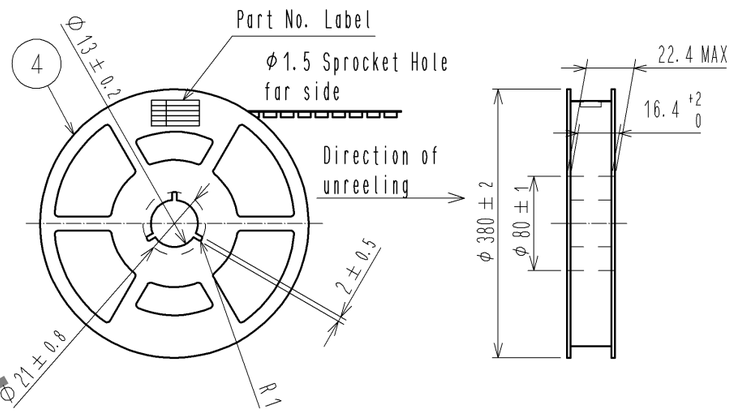

Detail of part No. Label

生産月日	年　月　日
図　番	CL667-0041-5-21
品　名	DF59M-1S-H(21)
納入数量	10000 KO
納入者	ヒロセ電機(株)

B-B

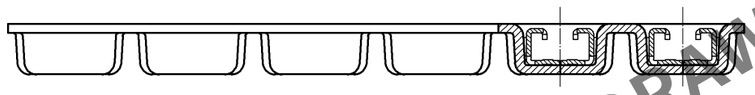

Direction of unreeling

7 Taping(Free)

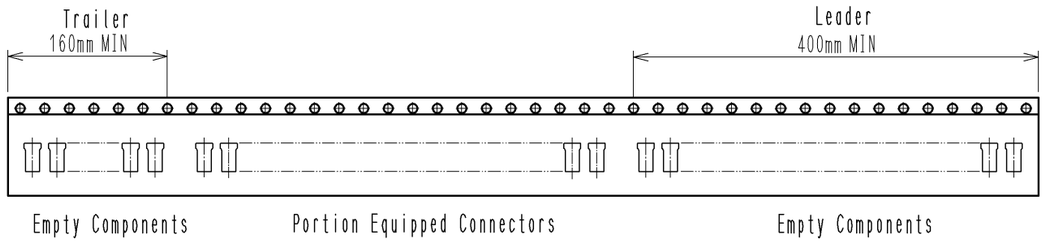

Reflow Temperature Profile Using Lead-Free Solder Paste(Reference)

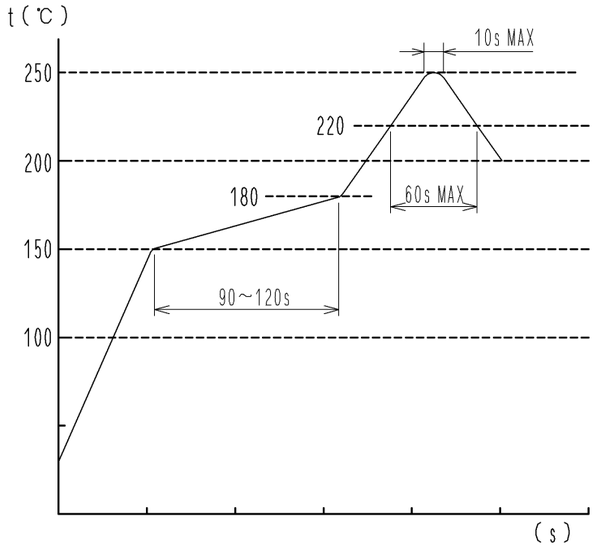

Number of reflow cycles 2 cycles Max.
The Temperature Is Measured In The Terminal Lead Part.

Additional factors.such as solder paste Type.
PCB Size and other mounted components could affect
The PROFILE.
Therefor, A thorough evaluation of mounting Condition is
required prior to production.
temperature is measured at contact lead.

NOTE6. 1ReelL:10000 connectors.
7 Reel to IEC 60286-3 and JIS C 0806 (Packaging of Components for Automationg Handling)
8 It becomes the center position of adsorption.
9. Rough plating surface of connector top after reflow doesn't affect product quality.
10. Always refer to the manuals below for operation of this product.
For Operation Manual ETAD-H0779

HRS DRAWING FOR REFERENCE

DRAWING NO.	EDC3-356514-01
PART NO.	DF59M-1S-H(21)
CODE NO.	CL667-0041-5-21

△ 2/2