Jun.1.2024 Copyright 2024 HIROSE ELECTRIC CO., LTD. All Rights Reserved.
In case of consideration for using Automotive equipment / device which demand high reliability, kindly contact our sales window correspondents.

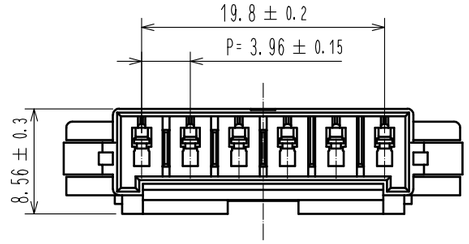

Mating figure(Panel mounting)

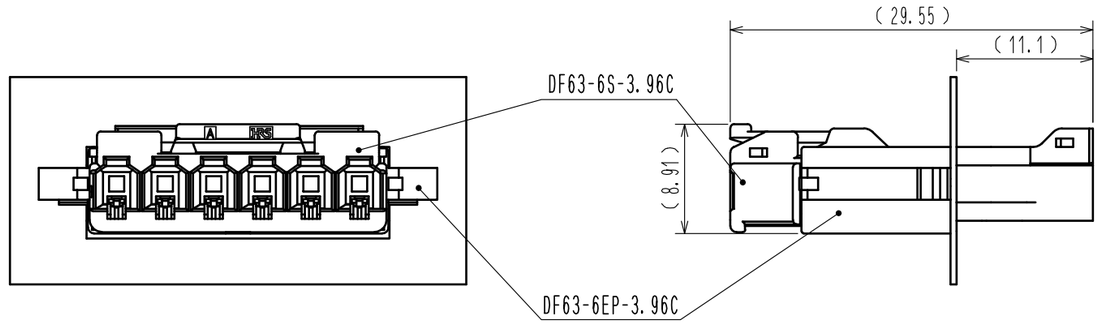

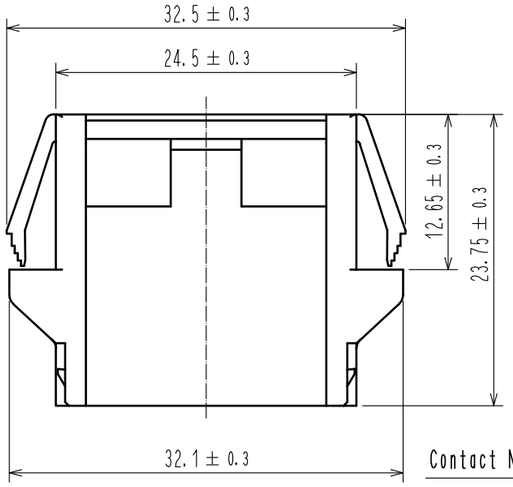

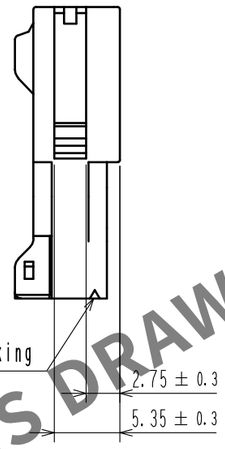

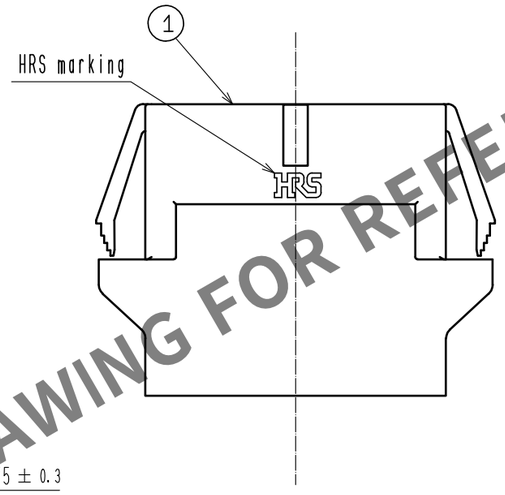

HRS DRAWING FOR REFERENCE

1 3 Recommended panel cutout dimension

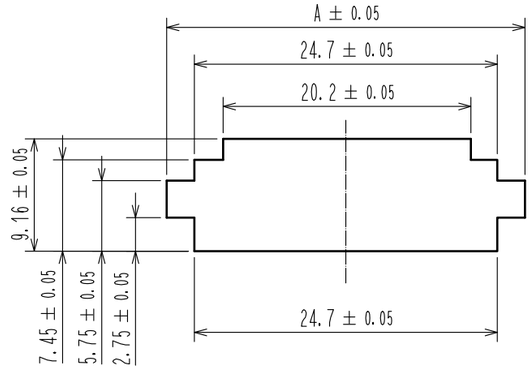

2

Panel thickness	A
0.5 to 0.6	28.60
0.7 to 1.1	29.10
1.2 to 1.7	29.60
2.0 to 2.3	30.10

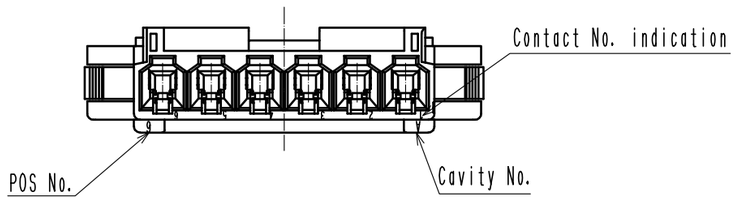

1 Please use non-radius side for the panel hooking area.
2 Applicable panel thicknessing is 2.3 to 0.5mm.
3 Consult hirose for the other panel cutout designs than recommended one.
4. Per pack : 100 pieces.
5. The dimension in parenthesis are for reference.
1 6. UL(File No.E52653)
C-UL(File No.E52653)
TUV(Certificate No.R50318850)authorization article.

NO.	MATERIAL	FINISH , REMARKS	NO.	MATERIAL	FINISH , REMARKS
			1	PBT	UL94V-0(BLACK)

UNITS	SCALE		COUNT	DESCRIPTION OF REVISIONS	DESIGNED	CHECKED	DATE
mm	2 : 1	1	1	DIS-H-00004211	TS. KUMAZAWA	SZ. ONO	18.09.14

HIROSE ELECTRIC CO., LTD.

APPROVED	: HS. OKAWA	17.02.14	DRAWING NO.	EDC-365620-00-00
CHECKED	: TS. FUKUSHIMA	17.02.14	PART NO.	DF63-6EP-3.96C
DESIGNED	: YK. YAMAGUCHI	17.02.14	CODE NO.	CL680-0554-0-00
DRAWN	: YK. YAMAGUCHI	17.02.14		1 / 1

FORM HC0011-5-7