Apr.1.2024 Copyright 2024 HIROSE ELECTRIC CO., LTD. All Rights Reserved.
In case of consideration for using Automotive equipment / device which demand high reliability, kindly contact our sales window correspondents.

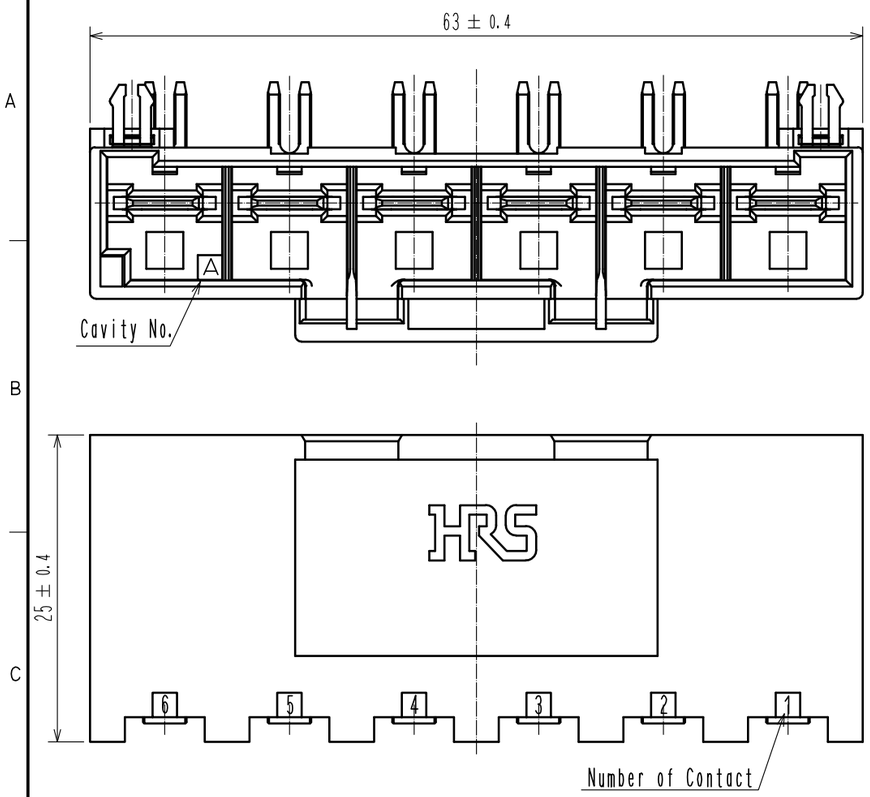

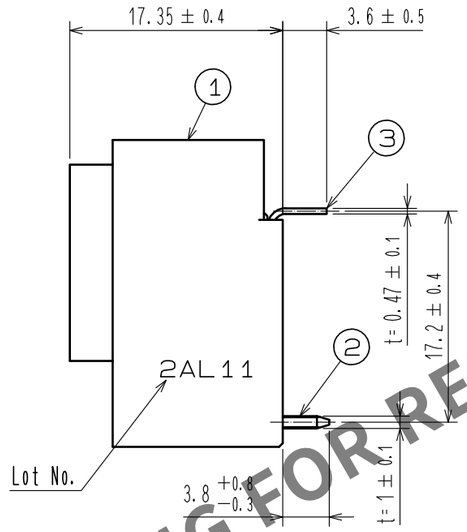

Recommended PCB Layout
(Board thickness : t=1.6±0.1mm)

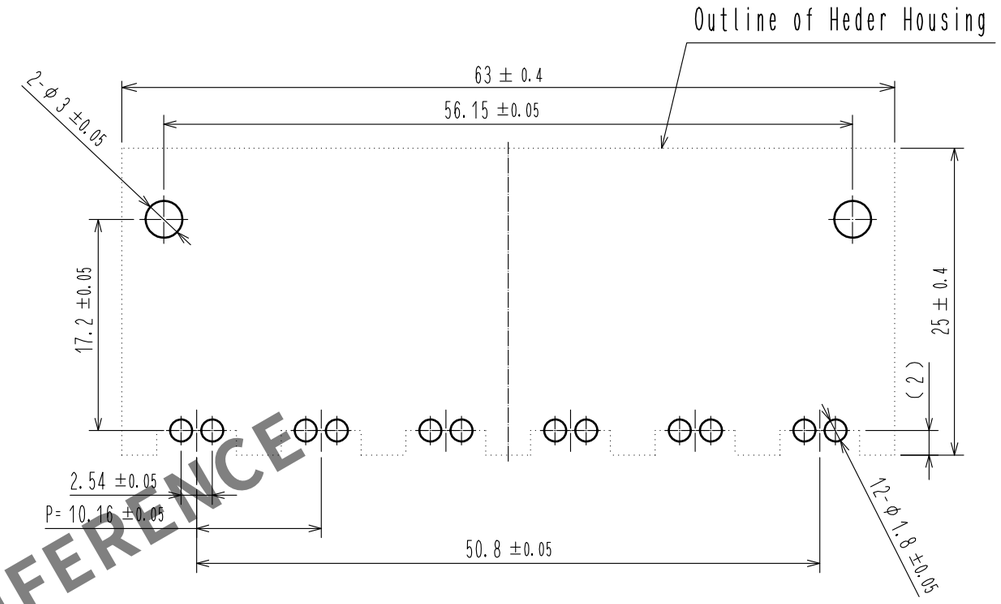

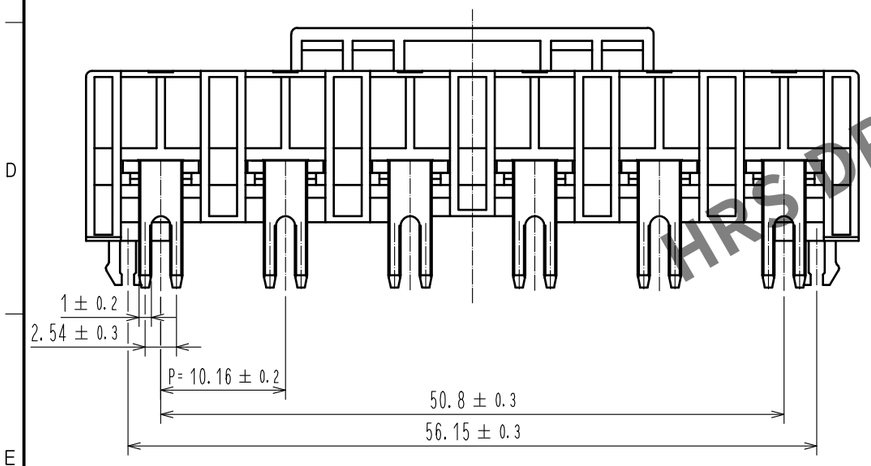

Application Diagram

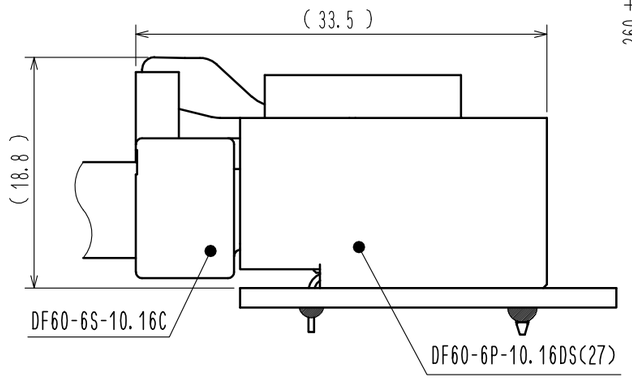

Packing Diagram(FREE)

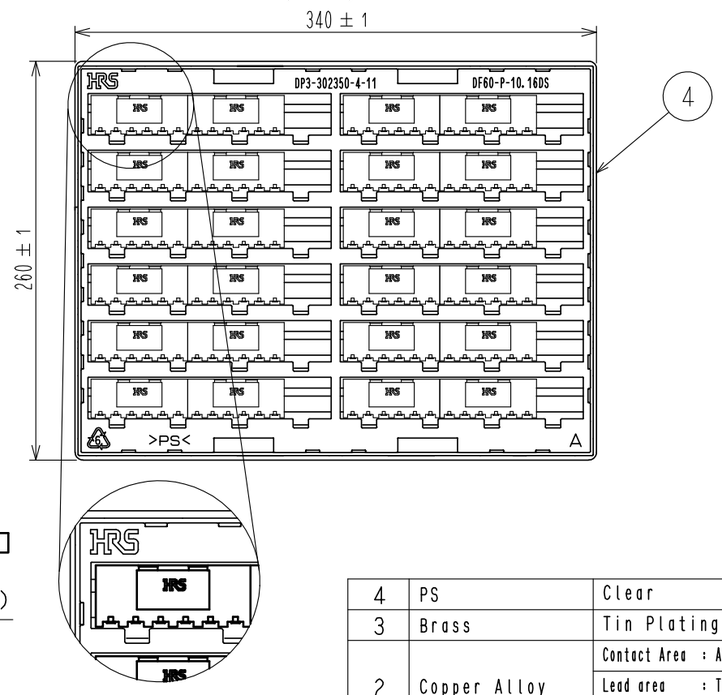

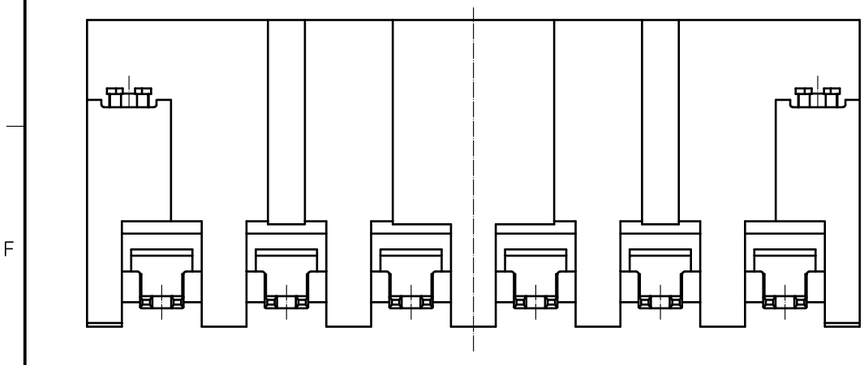

Notes 1. Per tray : 24 Pieces.
2. UL(File No.E52653)
C-UL(File No.E52653)
TUV (Certificate No. R50244085)
authorization article.

NO.	MATERIAL	FINISH , REMARKS
1	PBT	BLACK. UL94-V0

NO.	MATERIAL	FINISH , REMARKS
4	PS	Clear
3	Brass	Tin Plating 1μm min
2	Copper Alloy	Contact Area : Au Plating 0.2μm min
		Lead area : Tin Plating 1μm min
		Under Plating : Ni Plating 1μm min

UNITS	SCALE	COUNT	DESCRIPTION OF REVISIONS	DESIGNED	CHECKED	DATE
mm	2 : 1	0				

HIROSE ELECTRIC CO., LTD.

APPROVED	: KI. AKIYAMA	16. 04. 05	DRAWING NO.	EDC-342148-27-00
CHECKED	: TS. FUKUSHIMA	16. 04. 05	PART NO.	DF60-6P-10.16DS(27)
DESIGNED	: TS. KUMAZAWA	16. 04. 05	CODE NO.	CL680-3020-1-27
DRAWN	: TS. KUMAZAWA	16. 04. 05		0 1/1

HRS DRAWING FOR REFERENCE