May.1.2024 Copyright 2024 HIROSE ELECTRIC CO., LTD. All Rights Reserved.
In case of consideration for using Automotive equipment / device which demand high reliability, kindly contact our sales window correspondents.

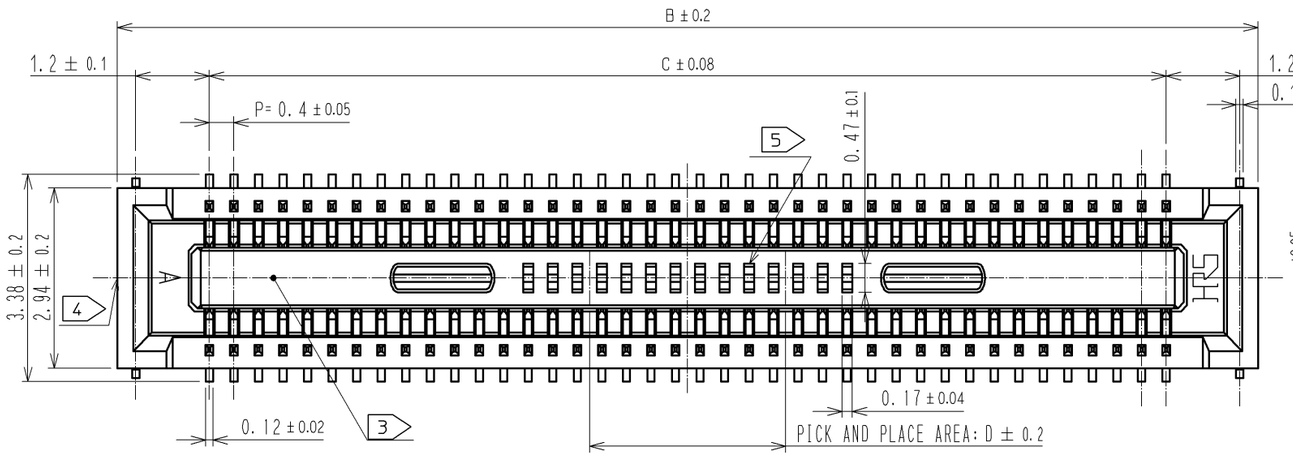


RECOMMENDED PATTERN

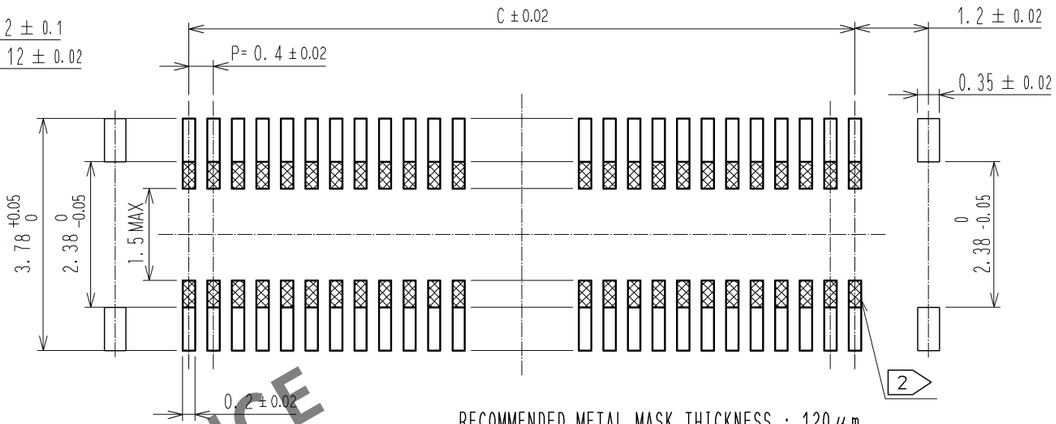


RECOMMENDED METAL MASK THICKNESS : 120μm
RECOMMENDED METAL MASK OPENING TATIO : 80% FOR READ PAD

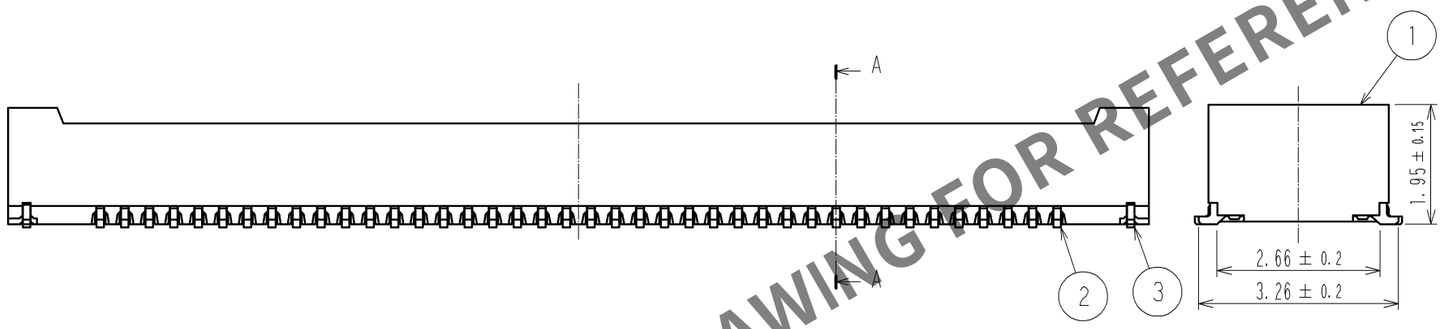


| PART NO. | CODE NO. | B | C | D |
|---|---|---|---|---|
| DF40B(2.0)-10DS-0.4V(51) | — | 4.6 | 1.6 | 1.0 |
| DF40B(2.0)-12DS-0.4V(51) | CL684-4150-8-51 | 5.0 | 2.0 | 1.0 |
| DF40B(2.0)-20DS-0.4V(51) | — | 6.6 | 3.6 | 1.0 |
| DF40B(2.0)-24DS-0.4V(51) | — | 7.4 | 4.4 | 1.0 |
| DF40B(2.0)-30DS-0.4V(51) | — | 8.6 | 5.6 | 1.5 |
| DF40B(2.0)-40DS-0.4V(51) | — | 10.6 | 7.6 | 3.2 |
| DF40B(2.0)-50DS-0.4V(51) | — | 12.6 | 9.6 | 3.2 |
| DF40B(2.0)-60DS-0.4V(51) | — | 14.6 | 11.6 | 3.2 |
| DF40B(2.0)-70DS-0.4V(51) | — | 16.6 | 13.6 | 3.2 |
| DF40B(2.0)-80DS-0.4V(51) | CL684-4128-9-51 | 18.6 | 15.6 | 3.2 |
| DF40B(2.0)-90DS-0.4V(51) | — | 20.6 | 17.6 | 3.2 |
| DF40B(2.0)-100DS-0.4V(51) | — | 22.6 | 19.6 | 3.2 |

HRS DRAWING FOR REFERENCE

A-A(20:1)

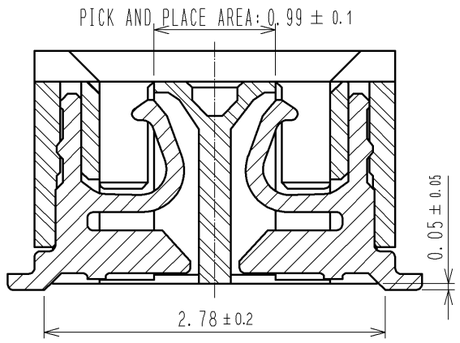


ENGAGEMENT FIGURE(20:1)

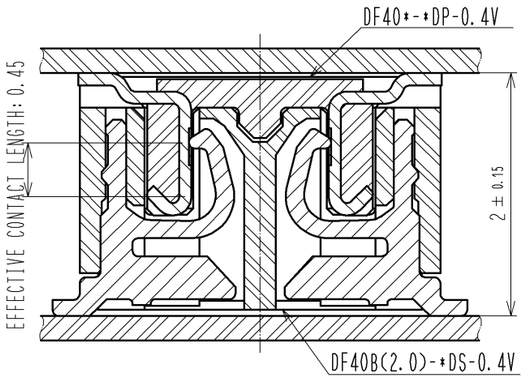


NOTES) 1. ALL LEADS CO-PLANARITY SHALL BE 0.1 MAX
2 IS NO PATTERN AREA OTHER THAN THE SAME CIRCUIT.
3 GATE POSITION OF 60 TO 100 POSITIONS IS POSITIONED IN APPROXIMAL AREA SHOWN.
4 GATE POSITION OF 10 TO 50 POSITIONS IS POSITIONED IN APPROXIMAL AREA SHOWN.
A PART OF THE WALL COULD BE NOTCHED FOR SETTING GATE.
5 60 TO 100 POSITIONS HAVE CONCAVE PORTION.

| NO. | MATERIAL | FINISH . REMARKS | NO. | MATERIAL | FINISH . REMARKS |
|---|---|---|---|---|---|
| 2 | PHOSPHOR BRONZE | CONTACT AREA:GOLD 0.05μm MIN | 6 | PS | BLACK |
| | | SMT LEAD:GOLD 0.05μm MIN | 5 | POLYESTER | CLEAR, COVER TAPE |
| | | UNDERPLATING:NICKEL 1μm MIN | 4 | PS | CLEAR, EMBOSSED CARRIER TAPE |
| 1 | LCP | BLACK, UL94V-0 | 3 | PHOSPHOR BRONZE | GOLD |

| UNITS | SCALE | △の数 | 訂 正 記 事 | 設 計 | 検 図 | 年月日 |
|---|---|---|---|---|---|---|
| mm | 10 : 1 | △ | | | | |

HRS HIROSE ELECTRIC CO., LTD.

| | | | |
|---|---|---|---|
| 承 認 | : TS.MIYAZAKI | 10.12.16 | 図番 : EDC3-332419-01 |
| 検 図 | : AR.TAKAHASHI | 10.12.16 | 製品名 : DF40B(2.0)-*DS-0.4V(51) |
| 設 計 | : TK.SUZUKI | 10.12.16 | 製品コード CL684 |
| 製 図 | : TK.SUZUKI | 10.12.16 | △ 1/2 |

FORM HC0011-5-3

May.1.2024 Copyright 2024 HIROSE ELECTRIC CO., LTD. All Rights Reserved.
In case of consideration for using Automotive equipment / device which demand high reliability, kindly contact our sales window correspondents.

SCALE (FREE)

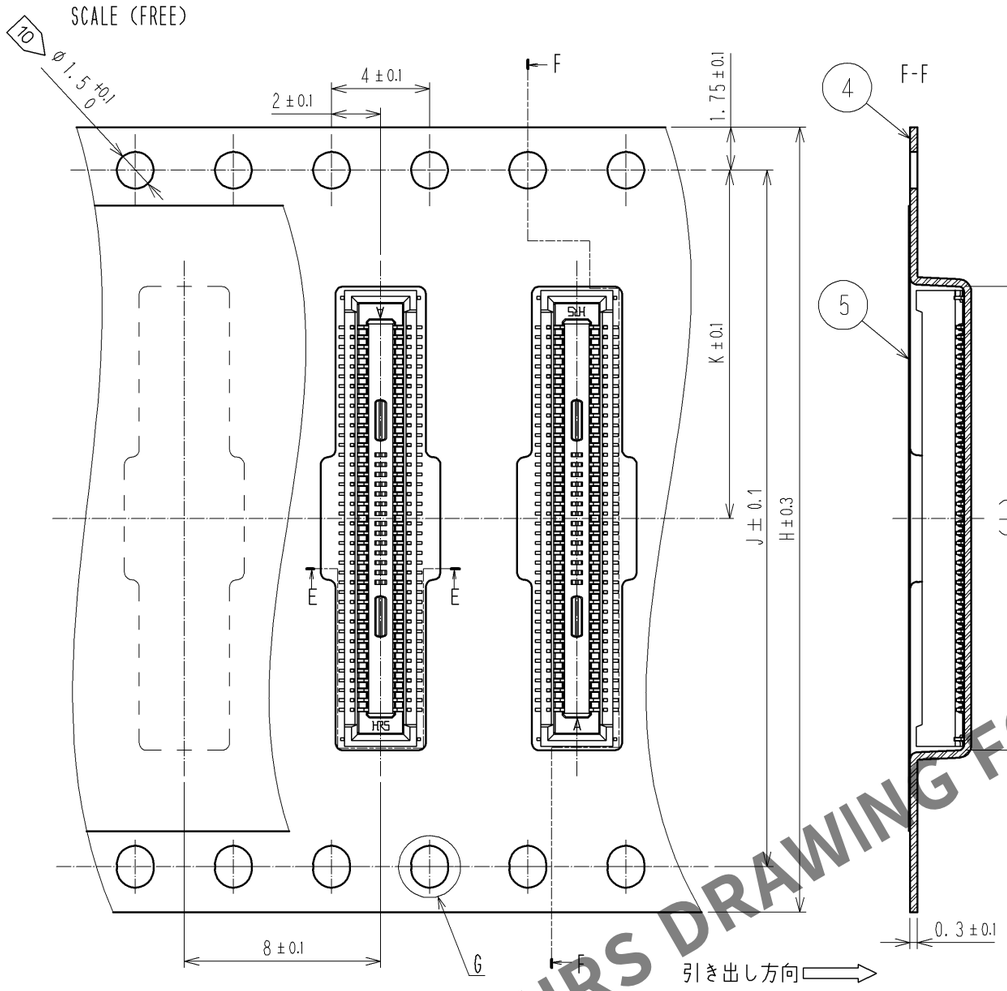


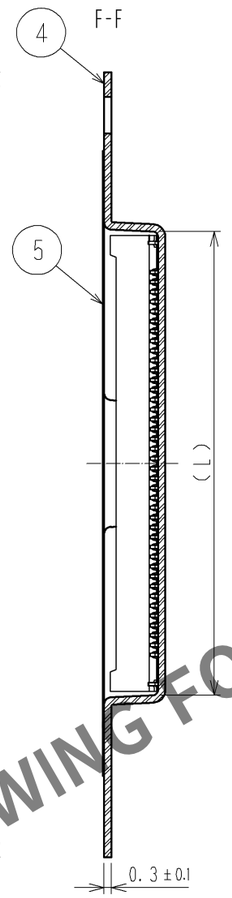


G(10:1)

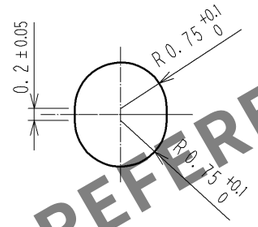


STYLE AND DIMENSION OF REEL(FREE SIZE)

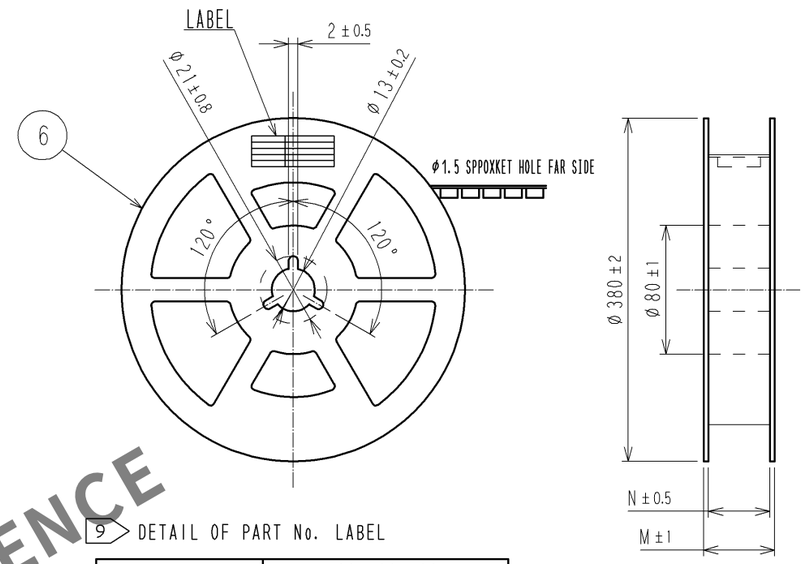


9 DETAIL OF PART No. LABEL

| | |
|---|---|
| 製造年月日 | ** ** ** |
| 製品コード | CL684-****-*-51 |
| 製品名 | DF40B(2.0)-*DS-0.4V(51) |
| 数量 | 4000 |
| 納入者 | ヒロセ電機(株) |

| PART NO. | H | J | K | L | M | N |
|---|---|---|---|---|---|---|
| DF40B(2.0)-10DS-0.4V(55) | 16 | — | 7.5 | 4.9 | 21.5 | 17.5 |
| DF40B(2.0)-12DS-0.4V(55) | 16 | — | 7.5 | 5.3 | 21.5 | 17.5 |
| DF40B(2.0)-20DS-0.4V(55) | 16 | — | 7.5 | 6.9 | 21.5 | 17.5 |
| DF40B(2.0)-24DS-0.4V(55) | 16 | — | 7.5 | 7.7 | 21.5 | 17.5 |
| DF40B(2.0)-30DS-0.4V(55) | 24 | — | 11.5 | 8.9 | 29.5 | 25.5 |
| DF40B(2.0)-40DS-0.4V(55) | 24 | — | 11.5 | 10.9 | 29.5 | 25.5 |
| DF40B(2.0)-50DS-0.4V(55) | 24 | — | 11.5 | 12.9 | 29.5 | 25.5 |
| DF40B(2.0)-60DS-0.4V(55) | 24 | — | 11.5 | 14.9 | 29.5 | 25.5 |
| DF40B(2.0)-70DS-0.4V(55) | 32 | 28.4 | 14.2 | 16.9 | 37.5 | 33.5 |
| DF40B(2.0)-80DS-0.4V(55) | 32 | 28.4 | 14.2 | 18.9 | 37.5 | 33.5 |
| DF40B(2.0)-90DS-0.4V(55) | 44 | 40.4 | 20.2 | 20.9 | 49.5 | 45.5 |
| DF40B(2.0)-100DS-0.4V(55) | 44 | 40.4 | 20.2 | 22.9 | 49.5 | 45.5 |

E-E(10～30POS.)

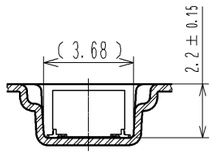


E-E(40～100POS.)

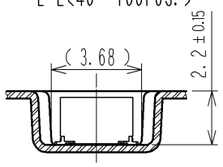


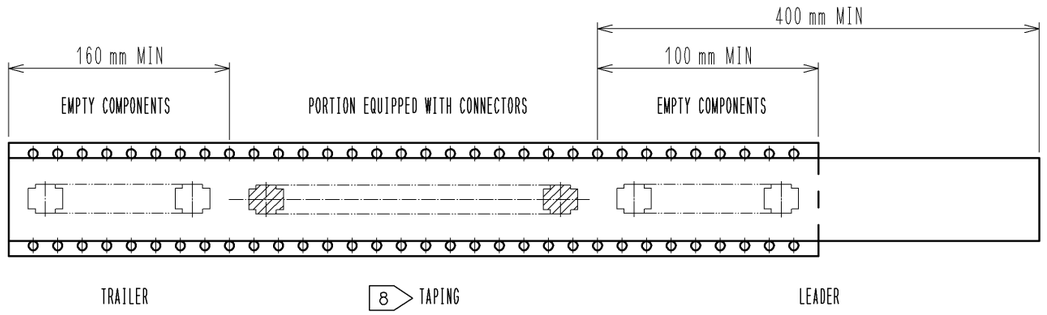


NOTES 6. PER REEL 4000 CONNECTORS.
7. THE DIMENSIONS IN PARENTHESES ARE FOR REFERENCE.
8 REFER TO JIS C 0806(PACKING OF COMPONENTS FOR AUTOMATIC HANDLING)
9 DETAIL OF PART NO. LABEL IS WRITTEN IN JAPANESE.
PART NO. LABEL DESCRIBS THE FOLLOWING INFORMATION FROM TOP.
PRODUCTION DATE:
PRODUCT CODE: CL684-****-*-51
PART NUMBER: DF40B(2.0)-*DS-0.4V(51)
NUMBER OF PIECES: 4000 PIECES
SUPPLIER NAME: HIROSE ELECTRIC CO., LTD.
10 TO 60 POSITIONS EMBOSSED CARRIER TAPE HAS
10 THE SPROCKET HOLE ON ONE SIDES.

HRS DRAWING FOR REFERENCE

HRS

| | |
|---|---|
| 図番: | EDC3-332419-01 |
| 製品名: | DF40B(2.0)-*DS-0.4V(51) |
| 製品コード | CL684 |

△ 2/2