Apr.1.2024 Copyright 2024 HIROSE ELECTRIC CO., LTD. All Rights Reserved.
In case of consideration for using Automotive equipment / device which demand high reliability, kindly contact our sales window correspondents.

ELV, RoHS COMPLIANT

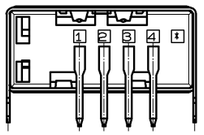

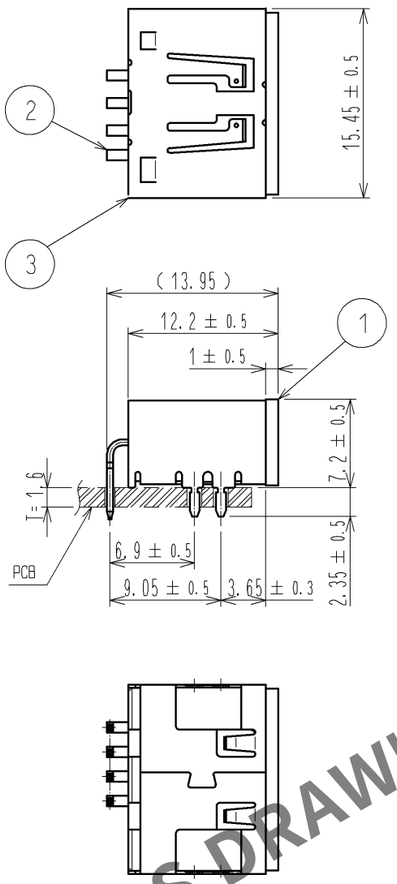

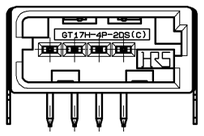

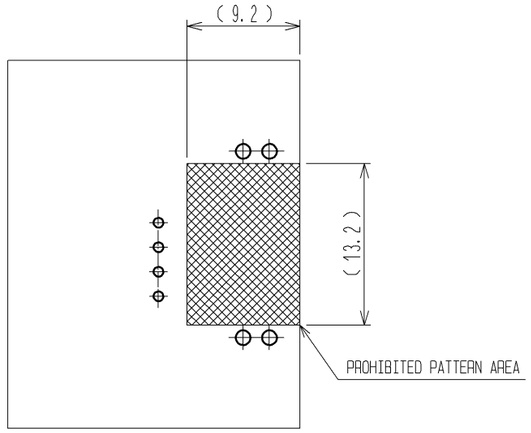

RECOMMENDED PCB PATTERN
(CONNECTOR SIDE)

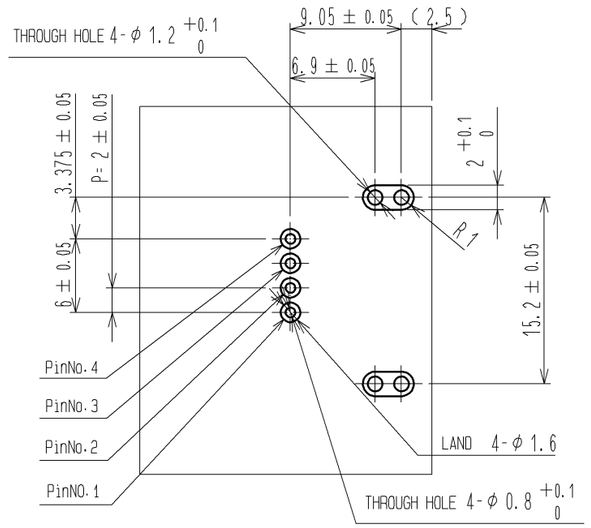

RECOMMENDED PCB PATTERN
(SOLDERING FOR REFERENCE)

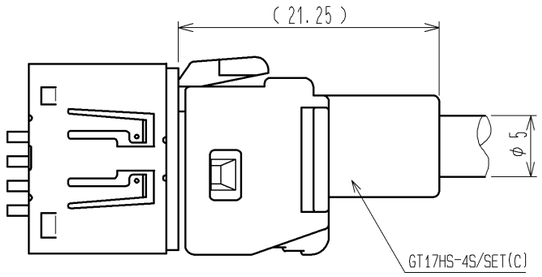

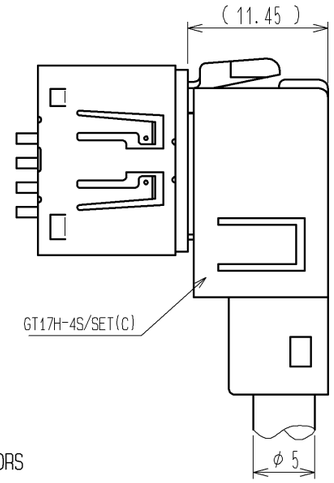

MATED CONNECTORS

NOTE1. APPLICABLE CONNECTOR : GT17H-4S/SET(C)
GT17HS-4S/SET(C)
2. APPLICABLE PC BOARD : T=1.6mm

NO.	MATERIAL	FINISH , REMARKS	NO.	MATERIAL	FINISH , REMARKS
3	COPPER ALLOY	TIN PLATING			
2	BRASS	TIN PLATING	5	PS	
1	PPS	BLUE	4	PS	

UNITS	SCALE	COUNT	DESCRIPTION OF REVISIONS	DESIGNED	CHECKED	DATE
mm	2 : 1					

HRS HIROSE ELECTRIC CO., LTD.

APPROVED	: AR. SHIRAI	10. 12. 28
CHECKED	: AR. SHIRAI	10. 12. 28
DESIGNED	: NH. NAKATA	10. 12. 28
DRAWN	: NH. NAKATA	10. 12. 28

DRAWING NO. EDC3-167222-00
PART NO. GT17H-4P-2DS(C)
CODE NO. CL767-0212-4-00
1/2

HRS DRAWING FOR REFERENCE

Apr.1.2024 Copyright 2024 HIROSE ELECTRIC CO., LTD. All Rights Reserved.
In case of consideration for using Automotive equipment / device which demand high reliability, kindly contact our sales window correspondents.

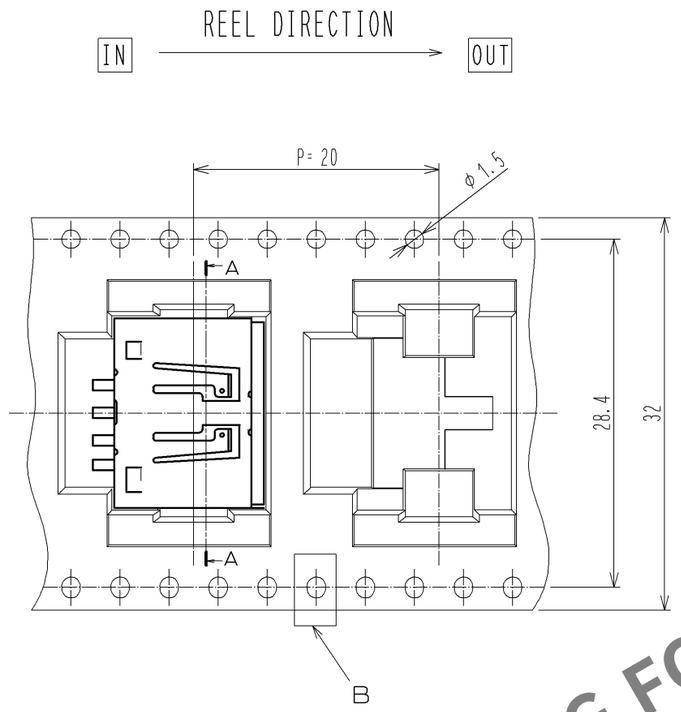

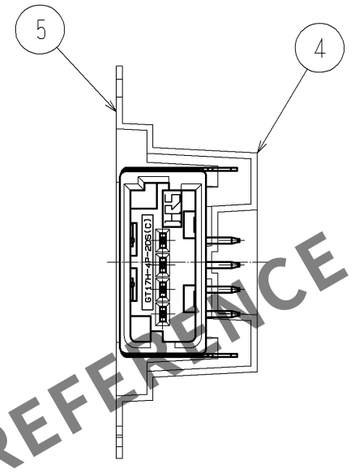

A−A

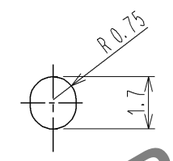

B(5:1)

HRS DRAWING FOR REFERENCE

PACKAGE STYLE

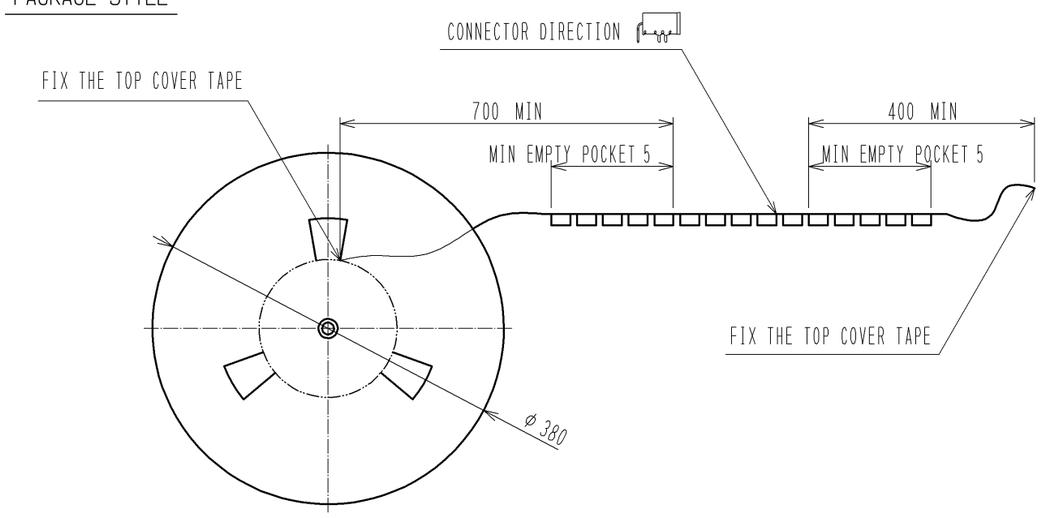

Package style

1. 300 PCS. / REEL
2. TOP COVER TAPE PEEL FORCE TO BE 0.1 TO 0.7 N AFTER SEALING.

HRS	DRAWING NO.	EDC3-167222-00
	PART NO.	GT17H-4P-2DS(C)
	CODE NO.	CL767-0212-4-00 △ 2/2